MKDS 5 HV/ 3-9,52 - PCB terminal block

1904150

https://www.phoenixcontact.com/us/products/1904150

Please be informed that the data shown in this PDF document is generated from our online catalog. Please find the complete data in the user documentation. Our general terms of use for downloads are valid.

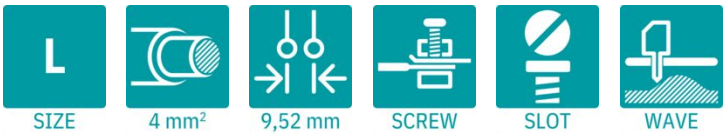

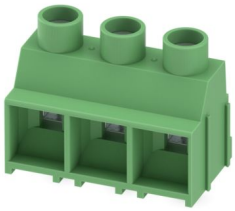

The figure shows a 2-pos. version of the product

PCB terminal block, nominal current: 32 A, rated voltage (III/2): 1000 V, nominal cross section: 4 mm^2, number of potentials: 3, number of rows: 1, number of positions per row: 3, product range: MKDS 5 HV, pitch: 9.52 mm, connection method: Screw connection with tension sleeve, screw head form: L Slotted, mounting: Wave soldering, conductor/PCB connection direction: 0 °, color: green, Pin layout: Linear pinning, Solder pin [P]: 5.2 mm, number of solder pins per potential: 1, type of packaging: packed in cardboard. The article can be aligned to create different nos. of positions!

Your advantages

- Well-known connection principle allows worldwide use
- Low temperature rise, thanks to maximum contact force
- Allows connection of two conductors
- The latching on the side enables various numbers of positions to be combined

Commercial data

Item number	1904150
Packing unit	50 pc
Minimum order quantity	50 pc
Sales key	AA14
Product key	AANFDD
GTIN	4017918187613
Weight per piece (including packing)	9.752 g
Weight per piece (excluding packing)	9.53 g
Customs tariff number	85369010
Country of origin	PL

Technical data

Product properties

Product type	PCB terminal block
Product family	MKDS 5 HV
Product line	COMBICON Terminals L
Type	PC terminal block can be aligned
Number of positions	3
Pitch	9.52 mm
Number of connections	3
Number of rows	1
Number of potentials	3
Pin layout	Linear pinning
Solder pins per potential	1

Fitting of components

Partial assembly	No

Electrical properties

Properties

Nominal current I_N	32 A
Nominal voltage U_N	1000 V
Rated voltage (III/3)	800 V
Rated surge voltage (III/3)	8 kV
Rated voltage (III/2)	1000 V
Rated surge voltage (III/2)	8 kV
Rated voltage (II/2)	1000 V
Rated surge voltage (II/2)	6 kV

Connection data

Connection technology

Type	PC terminal block can be aligned
Nominal cross section	4 mm²

Conductor connection

Connection method	Screw connection with tension sleeve
Conductor cross-section rigid	0.2 mm² ... 6 mm²
Conductor cross-section flexible	0.2 mm² ... 4 mm²
Conductor cross-section AWG	24 ... 10
Conductor cross-section, flexible, with ferrule, without plastic sleeve	0.25 mm² ... 4 mm²
Conductor cross-section, flexible, with ferrule, with plastic sleeve	0.25 mm² ... 4 mm²
2 conductors with same cross section, rigid	0.2 mm² ... 1.5 mm²
2 conductors with same cross section, flexible	0.2 mm² ... 1.5 mm²

2 conductors with same cross section, flexible, with ferrule without plastic sleeve	0.25 mm² ... 0.75 mm²
2 conductors with the same cross section, flexible, with TWIN ferrule with plastic sleeve	0.5 mm² ... 2.5 mm²
Stripping length	8 mm
Drive form screw head	Slotted (L)
Tightening torque	0.5 Nm ... 0.6 Nm

Mounting

Mounting type	Wave soldering
Pin layout	Linear pinning

Material specifications

Material data - contact

Note	WEEE/RoHS-compliant, free of whiskers according to IEC 60068-2-82/JEDEC JESD 201
Contact material	Cu alloy
Surface characteristics	Tin-plated
Metal surface terminal point (top layer)	Tin (4 µm - 8 µm Sn)
Metal surface soldering area (top layer)	Tin (4 µm - 8 µm Sn)

Material data - housing

Color (Housing)	green (6021)
Insulating material	PA
Insulating material group	I
CTI according to IEC 60112	600
Flammability rating according to UL 94	V0
Glow wire flammability index GWFI according to EN 60695-2-12	850
Glow wire ignition temperature GWIT according to EN 60695-2-13	775
Temperature for the ball pressure test according to EN 60695-10-2	125 °C

Notes

Note on application	For safe conductor connection, always adhere to a defined tightening torque. Particularly in the case of PCB terminal blocks with two or three positions, the individual solder pin for each contact point cannot compensate for this. That is why the terminal blocks must be supported during conductor connection (held with one hand, support on the housing).

Dimensions

Dimensional drawing	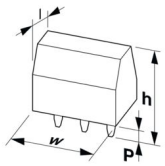

Pitch	9.52 mm
Width [w]	28.56 mm
Height [h]	26.7 mm
Length [l]	16 mm
Installed height	21.5 mm
Solder pin length [P]	5.2 mm
Pin dimensions	0.9 x 0.9 mm

PCB design

Hole diameter	1.3 mm

Mechanical tests

Test for conductor damage and slackening

Specification	IEC 60998-2-1:1990-04
Result	Test passed

Pull-out test

Specification	IEC 60998-2-1:1990-04
Conductor cross-section/conductor type/tractive force setpoint/actual value	0.2 mm² / solid / > 10 N
	0.2 mm² / flexible / > 10 N
	6 mm² / solid / > 80 N
	4 mm² / flexible / > 60 N

Torque test

Specification	IEC 60998-2-1:1990-04

Electrical tests

Temperature-rise test

Specification	IEC 60998-2-1:1990-04
Requirement temperature-rise test	Increase in temperature ≤ 45 K

Insulation resistance

Specification	IEC 60998-2-1:1990-04
Insulation resistance, neighboring positions	> 5 MΩ

Air clearances and creepage distances |

Specification	IEC 60664-1:2007-04
Insulating material group	I
Comparative tracking index (IEC 60112)	CTI 600
Rated insulation voltage (III/3)	800 V
Rated surge voltage (III/3)	8 kV
minimum clearance value - non-homogenous field (III/3)	8 mm
minimum creepage distance (III/3)	10 mm
Rated insulation voltage (III/2)	1000 V
Rated surge voltage (III/2)	8 kV

minimum clearance value - non-homogenous field (III/2)	8 mm
minimum creepage distance (III/2)	8 mm
Rated insulation voltage (II/2)	1000 V
Rated surge voltage (II/2)	6 kV
minimum clearance value - non-homogenous field (II/2)	5.5 mm
minimum creepage distance (II/2)	5.5 mm

Environmental and real-life conditions

Vibration test

Specification	IEC 60068-2-6:1995-03
Frequency	10 - 150 - 10 Hz
Sweep speed	1 octave/min
Amplitude	0.35 mm (10 Hz ... 60.1 Hz)
Acceleration	5g (60.1 Hz ... 150 Hz)
Test duration per axis	2.5 h
Test directions	X-, Y- and Z-axis

Glow-wire test

Specification	IEC 60998-2-1:1990-04
Temperature	850 °C
Time of exposure	5 s

Ambient conditions

Ambient temperature (storage/transport)	-40 °C ... 70 °C
Relative humidity (storage/transport)	30 % ... 70 %
Ambient temperature (assembly)	-5 °C ... 100 °C
Ambient temperature (operation)	-40 °C ... 100 °C (Depending on the current carrying capacity/derating curve)

Packaging specifications

Type of packaging	packed in cardboard

Drawings

Dimensional drawing

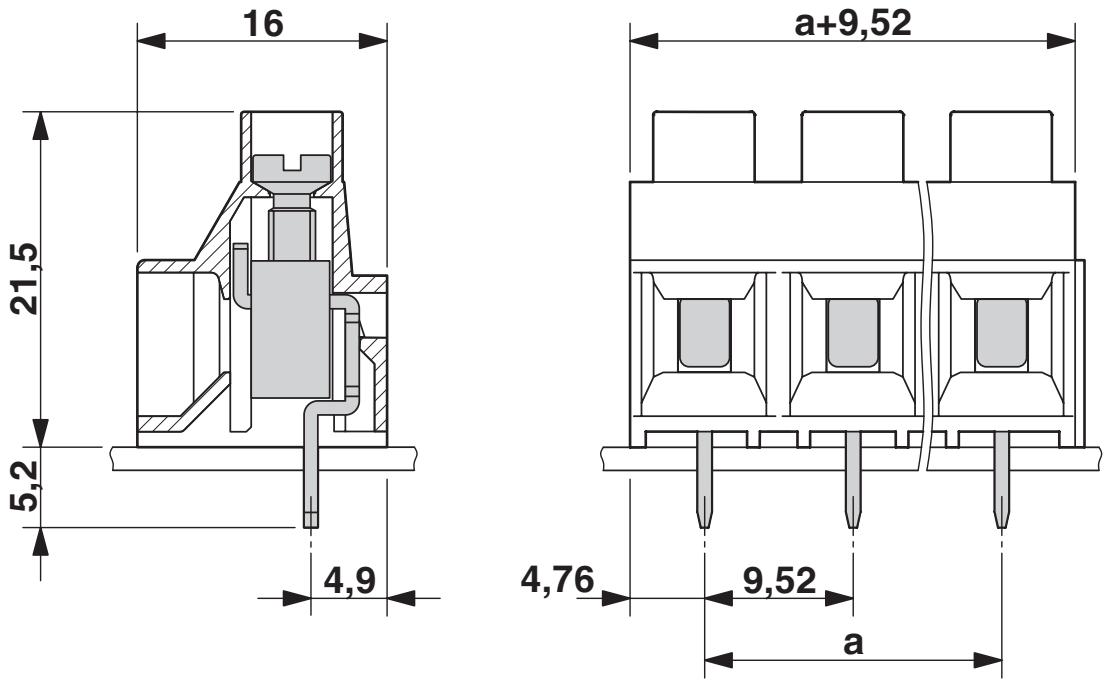

Diagram

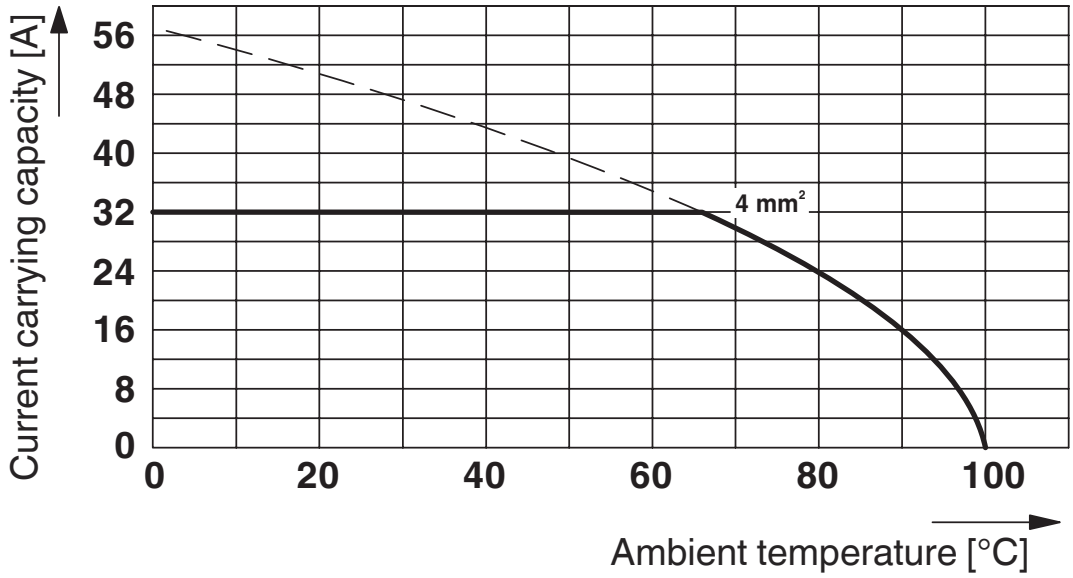

Type: MKDS 5 HV/2-9,52 and MKDS 5 HV/3-9,52

Test following DIN EN 60512-5-2:2003-01
Reduction factor = 1
No. of positions: 5

Drilling plan/solder pad geometry

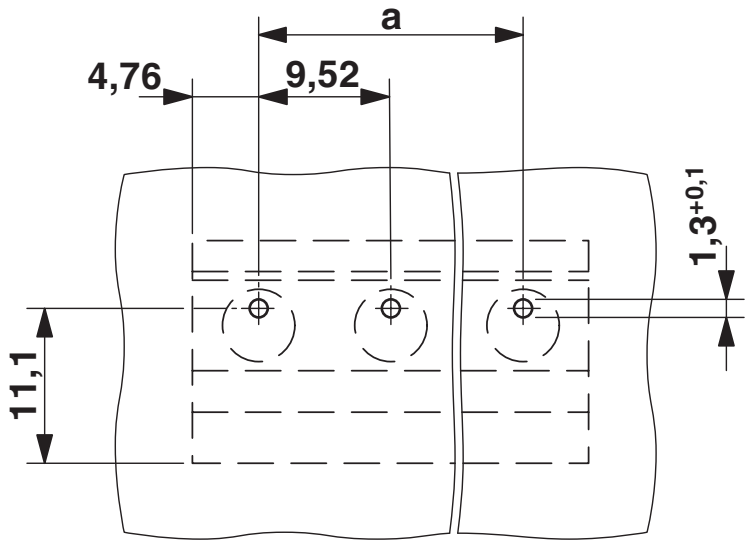

Approvals

To download certificates, visit the product detail page: https://www.phoenixcontact.com/us/products/1904150

cULus Recognized
Approval ID: E60425-19770427

	Nominal voltage U_N	Nominal current I_N	Cross section AWG	Cross section mm^2
B				
	300 V	30 A	30 - 10	-
C				
	300 V	30 A	30 - 10	-
D				
	600 V	5 A	30 - 10	-

VDE approval of drawings
Approval ID: 40055394

	Nominal voltage U_N	Nominal current I_N	Cross section AWG	Cross section mm^2
keine				
	1000 V	32 A	-	0.2 - 4

Classifications

ECLASS

ECLASS-13.0	27460101
ECLASS-15.0	27460101

ETIM

ETIM 10.0	EC002643

UNSPSC

UNSPSC 21.0	39121400

Environmental product compliance

EU RoHS

Fulfills EU RoHS substance requirements	Yes, No exemptions

China RoHS

Environment friendly use period (EFUP)	EFUP-E
	No hazardous substances above the limits

EU REACH SVHC

REACH candidate substance (CAS No.)	No substance above 0.1 wt%

EF3.1 Climate Change

CO2e kg	0.032 kg CO2e

Phoenix Contact 2026 © - all rights reserved
https://www.phoenixcontact.com

Phoenix Contact USA
586 Fulling Mill Road
Middletown, PA 17057, United States
(+717) 944-1300
info@phoenixcon.com