MCC 1/20-STZF-3,81 - PCB connector

1852545

https://www.phoenixcontact.com/us/products/1852545

Please be informed that the data shown in this PDF document is generated from our online catalog. Please find the complete data in the user documentation. Our general terms of use for downloads are valid.





The figure shows an 10-position version

PCB connector, nominal cross section: 1 mm^2, color: green, nominal current: 8 A, rated voltage (III/2): 160 V, contact connection type: Socket, number of potentials: 20, number of rows: 1, number of positions: 20, number of connections: 20, product range: MCC 1/..-STZF, pitch: 3.81 mm, connection method: Crimp connection, conductor/PCB connection direction: 0 °, plug-in system: COMBICON MC 1,5, locking: Screw locking mechanism, mounting method: Screw flange, type of packaging: packed in cardboard, Corresponding female crimp contacts with current [A] and conductor cross-section range [mm^2] data: 5A/MCC-MT 0,2-0,35 (1859988); 8A/MCC-MT 0,5-1,0 (1859991)

Your advantages

- Inexpensive connection of large quantities of preassembled conductors
- Screwable flange for superior mechanical stability
- Pull-out aid facilitates handling and allows the tensile force to be reduced at the contact point

Commercial data

Item number	1852545
Packing unit	50 pc
Minimum order quantity	50 pc
Note	Made to order (non-returnable)
Product key	AABCAB
GTIN	4017918144050
Weight per piece (including packing)	6.506 g
Weight per piece (excluding packing)	6.015 g
Country of origin	PL

Technical data

Product properties

Product type	PCB connector
Product family	MCC 1/..-STZF
Product line	COMBICON Connectors S
Type	Standard
Number of positions	20
Pitch	3.81 mm
Number of connections	20
Number of rows	1
Number of potentials	20
Mounting type	Screw flange

Fitting of components

Partial assembly	No

Electrical properties

Properties

Nominal current I_N	8 A
Nominal voltage U_N	160 V
Rated voltage (III/3)	160 V
Rated surge voltage (III/3)	2.5 kV
Rated voltage (III/2)	160 V
Rated surge voltage (III/2)	2.5 kV
Rated voltage (II/2)	320 V
Rated surge voltage (II/2)	2.5 kV

Connection data

Connection technology

Type	Standard
Connector system	COMBICON MC 1,5
Nominal cross section	1 mm²
Contact connection type	Socket

Interlock

Locking type	Screw locking mechanism
Mounting type	Screw flange

Conductor connection

Connection method	Crimp connection
Conductor/PCB connection direction	0 °
Conductor cross-section flexible	0.2 mm² ... 1 mm²
Conductor cross-section AWG	24 ... 18

Material specifications

Material data - contact

Metal surface contact area (top layer)	Tin (Sn)

Material data - housing

Color (Housing)	green (6021)
Insulating material	PA
Insulating material group	I
CTI according to IEC 60112	600
Flammability rating according to UL 94	V0
Glow wire flammability index GWFI according to EN 60695-2-12	850
Glow wire ignition temperature GWIT according to EN 60695-2-13	775
Temperature for the ball pressure test according to EN 60695-10-2	125 °C

Dimensions

Dimensional drawing	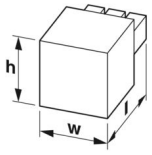
Pitch	3.81 mm
Width [w]	76.99 mm
Height [h]	8.7 mm
Length [l]	23.1 mm

Notes

Note on the contact	The information on the basic material and the finish properties of the crimp contacts is to be found in the E-Shop in the technical data for the respective crimp contact.
Note on application	All laboratory tests are performed in combination with the crimp contacts specified as accessories.
Note on application	The current depends on the crimp contact and conductor cross-section used.
Note on application	The corresponding crimp contacts are to be found in the "Accessories" tab.
Note on application	The crimp contacts may only be processed with approved crimping tools.
Note on the contact	These connectors conform to DIN EN 61984, connectors without switching power (COC). When used for their intended purpose, they must not be plugged in or disconnected live or under load.

Environmental and real-life conditions

Ambient conditions

Ambient temperature (storage/transport)	-40 °C ... 70 °C
Relative humidity (storage/transport)	30 % ... 70 %
Ambient temperature (assembly)	-5 °C ... 100 °C
Ambient temperature (operation)	-40 °C ... 100 °C (dependent on the derating curve)

Electrical tests

Air clearances and creepage distances |

Specification	IEC 60664-1:2007-04
Insulating material group	I
Comparative tracking index (IEC 60112)	CTI 600
Rated insulation voltage (III/3)	160 V
Rated surge voltage (III/3)	2.5 kV
minimum clearance value - non-homogenous field (III/3)	1.5 mm
minimum creepage distance (III/3)	2 mm
Rated insulation voltage (III/2)	160 V
Rated surge voltage (III/2)	2.5 kV
minimum clearance value - non-homogenous field (III/2)	1.5 mm
minimum creepage distance (III/2)	1.5 mm
Rated insulation voltage (II/2)	320 V
Rated surge voltage (II/2)	2.5 kV
minimum clearance value - non-homogenous field (II/2)	1.5 mm
minimum creepage distance (II/2)	1.6 mm

Packaging specifications

Type of packaging	packed in cardboard

Drawings

Dimensional drawing

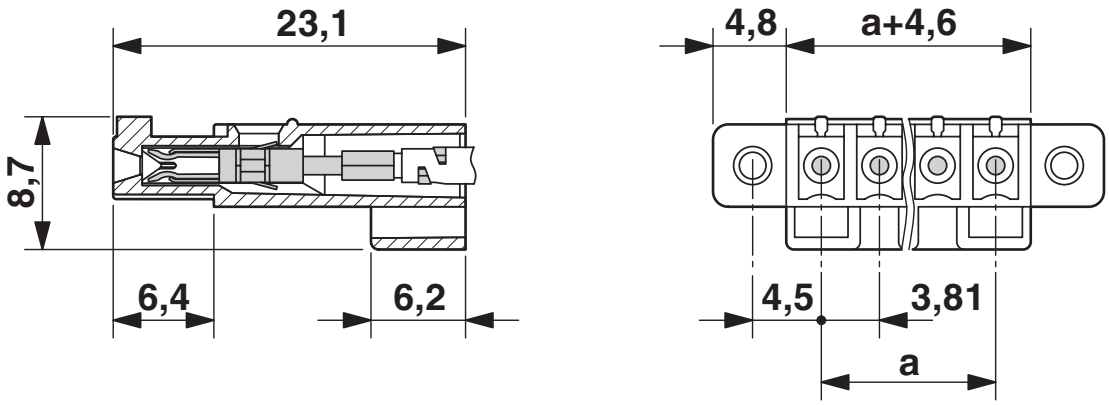

Diagram

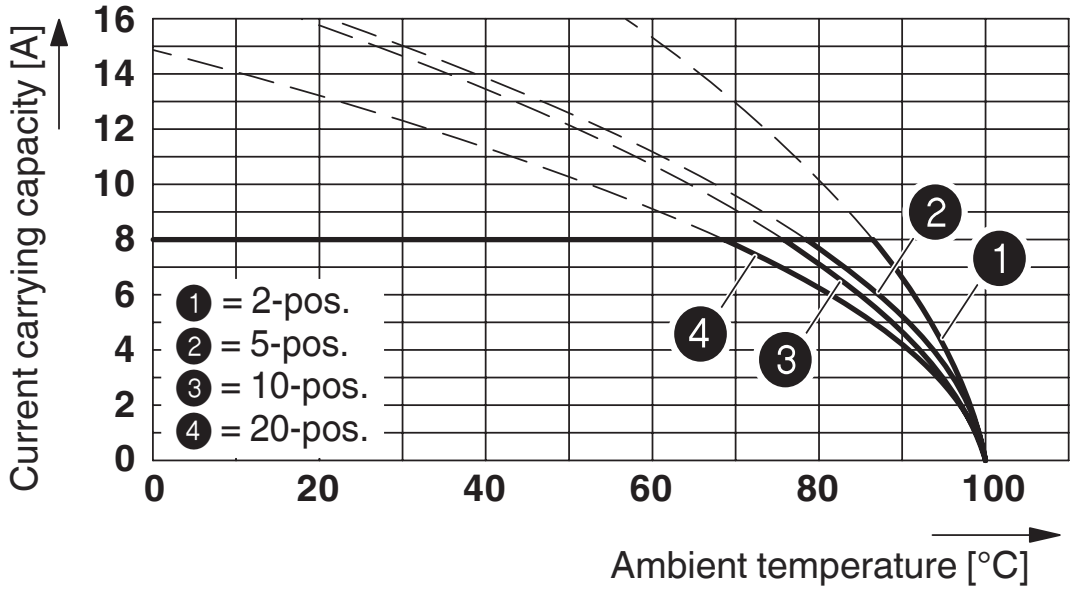

Type: MCC 1/...-ST-3,81 with MC 1,5/...-G-3,81; contact: MCC-MT 0,5 - 1,0

Approvals

To download certificates, visit the product detail page: https://www.phoenixcontact.com/us/products/1852545

cULus Recognized
Approval ID: E60425-20110128

	Nominal voltage U_N	Nominal current I_N	Cross section AWG	Cross section mm^2
B				
	300 V	5 A	24 - 22	-
D				
	300 V	5 A	24 - 22	-

Classifications

ECLASS

ECLASS-13.0	27460202
ECLASS-15.0	27460202

ETIM

ETIM 10.0	EC002638

UNSPSC

UNSPSC 21.0	39121400

Environmental product compliance

EU RoHS

Fulfills EU RoHS substance requirements	Yes, No exemptions

China RoHS

Environment friendly use period (EFUP)	EFUP-E
	No hazardous substances above the limits

EU REACH SVHC

REACH candidate substance (CAS No.)	No substance above 0.1 wt%

EF3.1 Climate Change

CO2e kg	0.008 kg CO2e

Phoenix Contact 2026 © - all rights reserved
https://www.phoenixcontact.com

Phoenix Contact USA
586 Fulling Mill Road
Middletown, PA 17057, United States
(+717) 944-1300
info@phoenixcon.com