IC-DFR 14 - Panel-mount frame

1852147

https://www.phoenixcontact.com/us/products/1852147

Please be informed that the data shown in this PDF document is generated from our online catalog. Please find the complete data in the user documentation. Our general terms of use for downloads are valid.





Panel-mount frame, nominal cross section: 2.5 mm², color: green, number of potentials: 14, number of rows: 1, number of positions: 14, number of connections: 14, product range: IC-DFR, pitch: 5.08 mm, type of packaging: packed in cardboard, This assembly frame can only be used in combination with IC 2,5/...-STGF-5,08

Your advantages

- Feed-through assembly frame for inverted COMBICON connector IC 2,5/-STGF-5,08
- Cable connection on the inside of the device enables flexible positioning of the panel feed-through
- Mounting flanges reduce the mechanical strain on the soldering spots
- Can be combined with the MSTB 2,5 range

Commercial data

Item number	1852147
Packing unit	50 pc
Minimum order quantity	50 pc
Sales key	AA08
Product key	AAHZBE
GTIN	4017918109028
Weight per piece (including packing)	3.337 g
Weight per piece (excluding packing)	3.1 g
Customs tariff number	39269097
Country of origin	PL

Technical data

Product properties

Product type	Panel-mount frame
Product family	IC-DFR
Product line	COMBICON Connectors Special
Type	Feed-through assembly frame
Number of positions	14
Pitch	5.08 mm
Number of connections	14
Number of rows	1
Number of potentials	14

Fitting of components

Partial assembly	No

Dimensions

Dimensional drawing	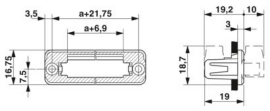
Pitch	5.08 mm
Width [w]	94.79 mm
Height [h]	16.75 mm
Length [l]	19 mm
Installed height	16.75 mm

Material specifications

Material data - housing

Color (Housing)	green (6021)
Insulating material	PA
Insulating material group	I
CTI according to IEC 60112	600
Flammability rating according to UL 94	V0
Glow wire flammability index GWFI according to EN 60695-2-12	850
Glow wire ignition temperature GWIT according to EN 60695-2-13	775
Temperature for the ball pressure test according to EN 60695-10-2	125 °C

Connector

Connection 1

Insulating material	PA
CTI according to IEC 60112	600

Environmental and real-life conditions

Ambient conditions

Relative humidity (storage/transport)	30 % ... 70 %

Packaging specifications

Type of packaging	packed in cardboard

Drawings

Drilling plan/solder pad geometry

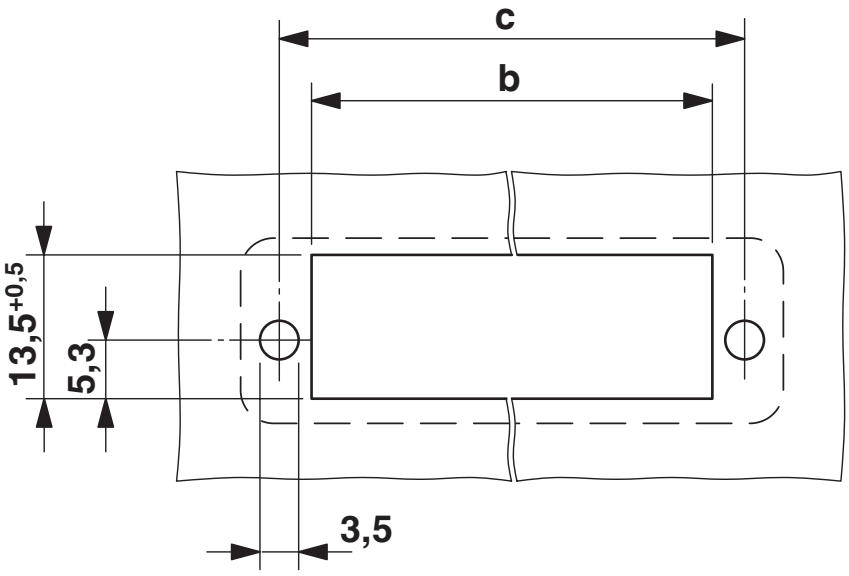

Dimension b: 10.84 mm + (no. of pos. x 5.08 mm)
Dimension c: Dim. b + 5.83 mm

Classifications

ECLASS

ECLASS-13.0	27460405
ECLASS-15.0	27460405

ETIM

ETIM 10.0	EC002943

UNSPSC

UNSPSC 21.0	39121400

Environmental product compliance

EU RoHS

Fulfills EU RoHS substance requirements	Yes, No exemptions

China RoHS

Environment friendly use period (EFUP)	EFUP-E
	No hazardous substances above the limits

EU REACH SVHC

REACH candidate substance (CAS No.)	No substance above 0.1 wt%

EF3.1 Climate Change

CO2e kg	0.023 kg CO2e

Phoenix Contact 2026 © - all rights reserved
https://www.phoenixcontact.com

Phoenix Contact USA
586 Fulling Mill Road
Middletown, PA 17057, United States
(+717) 944-1300
info@phoenixcon.com