PLW 16-6/ 3-10 - Panel feed-through terminal block

1821067

https://www.phoenixcontact.com/us/products/1821067

Please be informed that the data shown in this PDF document is generated from our online catalog. Please find the complete data in the user documentation. Our general terms of use for downloads are valid.

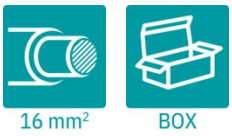

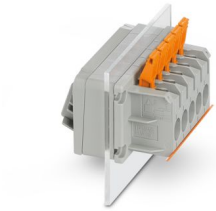

Panel feed-through terminal block, connection method: Push-lock connection, Push-in spring connection, number of positions: 3, load current: 41 A, cross section: 2.5 mm^2 - 16 mm^2, connection direction of the conductor to plug-in direction: 0 °, width: 54.4 mm, color: gray

Your advantages

- Tool-free lever principle enables time-saving connection and release of conductors with/without ferrules
- Defined contact force ensures that contact remains stable over the long term
- Time-saving push-in connection when lever is closed
- Quick, tool-free mounting on the housing wall using a fixing wedge

Commercial data

Item number	1821067
Packing unit	15 pc
Minimum order quantity	15 pc
Sales key	AA28
Product key	AA1DGA
GTIN	4046356788199
Weight per piece (including packing)	87.2 g
Weight per piece (excluding packing)	78.2 g
Customs tariff number	85369010
Country of origin	SK

Technical data

Product properties

Product type	Panel feed-through terminal block
Product family	PLW 16
Number of positions	3
Pitch	10 mm
Number of connections	6
Number of rows	1
Number of potentials	3
Solder pins per potential	1

Insulation characteristics

Overvoltage category	III
Degree of pollution	3

Fitting of components

Partial assembly	No

Electrical properties

Properties

Nominal current I_N	41 A
Nominal voltage U_N	1000 V
Rated voltage (III/3)	1000 V
Rated surge voltage (III/3)	8 kV
Rated voltage (III/2)	1000 V
Rated surge voltage (III/2)	8 kV
Rated voltage (II/2)	1000 V
Rated surge voltage (II/2)	6 kV

Connection data

Connection technology

Connector system	PLW 16-6
Nominal cross section	16 mm²

Conductor connection exterior

Connection method	Push-lock connection
Connection direction of the conductor to plug-in direction	0 °
Conductor cross-section rigid	2.5 mm² ... 16 mm²
Conductor cross-section flexible	2.5 mm² ... 25 mm²
Conductor cross-section, flexible, with ferrule, without plastic sleeve	2.5 mm² ... 16 mm²
Conductor cross-section, flexible, with ferrule, with plastic sleeve	2.5 mm² ... 16 mm²
Stripping length	18 mm

Conductor connection interior

Connection method	Push-in spring connection
Connection direction of the conductor to plug-in direction	35 °
Conductor cross-section, flexible, with ferrule, without plastic sleeve	1.5 mm² ... 6 mm²
Conductor cross-section, flexible, with ferrule, with plastic sleeve	1.5 mm² ... 6 mm²
Stripping length	15 mm

Material specifications

Material data - contact

Note	WEEE/RoHS-compliant, free of whiskers according to IEC 60068-2-82/JEDEC JESD 201
Contact material	Cu alloy
Surface characteristics	tin-plated

Material data - housing

Color (Housing)	gray (7042)
Insulating material	PA
Insulating material group	I
CTI according to IEC 60112	600
Flammability rating according to UL 94	V0
Glow wire flammability index GWFI according to EN 60695-2-12	850
Glow wire ignition temperature GWIT according to EN 60695-2-13	775
Temperature for the ball pressure test according to EN 60695-10-2	125 °C

Material data – actuating element

Insulating material	PBT GF
Insulating material group	IIIa
CTI according to IEC 60112	275
Flammability rating according to UL 94	V0

Notes

Safety note

Safety note	• WARNING: Only electrically qualified personnel may install and operate the product. They must observe the following safety notes. The qualified personnel must be familiar with the basics of electrical engineering. They must be able to recognize and prevent danger. The relevant symbol on the packaging indicates that only personnel familiar with electrical engineering are allowed to install and operate the product.
	• The installation notes/Design In documents online on the download page at phoenixcontact.com/products must be observed for this product.
	• The cable entry funnel is not safe to touch. Never connect or disconnect the terminal when it is energized. Take appropriate steps to ensure touch protection.

	• There is no electrical contact to the housing. Make sure that protective grounding is provided for green/yellow color variants and articles marked with PE.

Dimensions

Dimensional drawing	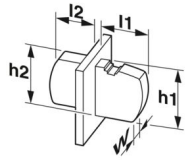
Pitch	10 mm
Width [w]	54.4 mm

External dimensions

Width [w]	54.4 mm
Height [h1]	43 mm
Length [l1]	25.7 mm

Internal dimensions

Width [w]	54.4 mm
Height [h2]	42.8 mm
Length [l2]	20.27 mm

Electrical tests

Air clearances and creepage distances | 1. Insulation coordination

Specification	IEC 60947-1:2007-06 + A1:2010-12
Insulating material group	I
Comparative tracking index (IEC 60112)	CTI 600
Rated insulation voltage (III/3)	1000 V
Rated surge voltage (III/3)	8 kV
minimum clearance value - non-homogenous field (III/3)	8 mm
minimum creepage distance (III/3)	12.5 mm
Rated insulation voltage (III/2)	1000 V
Rated surge voltage (III/2)	8 kV
minimum clearance value - non-homogenous field (III/2)	8 mm
minimum creepage distance (III/2)	5 mm
Rated insulation voltage (II/2)	1000 V
Rated surge voltage (II/2)	6 kV
minimum clearance value - non-homogenous field (II/2)	5.5 mm
minimum creepage distance (II/2)	5 mm

Environmental and real-life conditions

Ambient conditions

Ambient temperature (storage/transport)	-40 °C ... 70 °C

Relative humidity (storage/transport)	30 % ... 70 %
Ambient temperature (assembly)	-5 °C ... 105 °C
Ambient temperature (operation)	-40 °C ... 100 °C (Depending on the current carrying capacity/derating curve)

Ambient conditions

Ambient temperature (operation)	-40 °C ... 100 °C (Depending on the current carrying capacity/derating curve)
Ambient temperature (storage/transport)	-40 °C ... 70 °C
Relative humidity (storage/transport)	30 % ... 70 %
Ambient temperature (assembly)	-5 °C ... 105 °C

Packaging specifications

Type of packaging	packed in cardboard

Drawings

Dimensional drawing

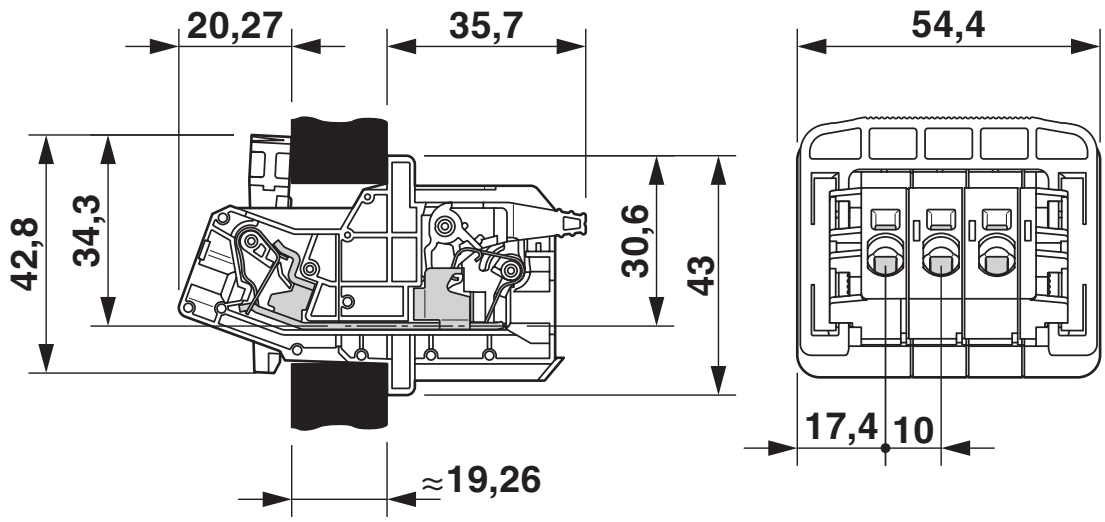

Dimension 54.4 mm for 3-pos. version;
4-pos.: 64.4 mm
5-pos.: 74.4 mm

Dimensional drawing

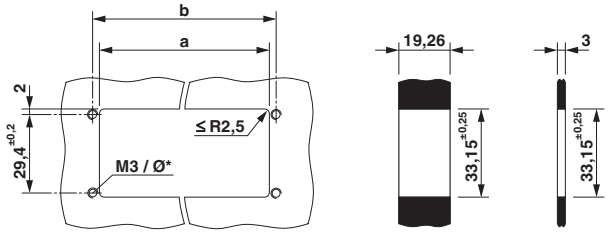

Dimension a = 43.9 mm ±0.25
Dimension b = 49 mm ±0.2

Approvals

To download certificates, visit the product detail page: https://www.phoenixcontact.com/us/products/1821067

cULus Recognized
Approval ID: E60425-20150120

	Nominal voltage U_N	Nominal current I_N	Cross section AWG	Cross section mm^2
B				
	600 V	40 A	16 - 6	-
C				
	600 V	40 A	16 - 6	-

Classifications

ECLASS

ECLASS-13.0	27141134
ECLASS-15.0	27141134

ETIM

ETIM 10.0	EC001283

UNSPSC

UNSPSC 21.0	39121400

Environmental product compliance

EU RoHS

Fulfills EU RoHS substance requirements	Yes, No exemptions

China RoHS

Environment friendly use period (EFUP)	EFUP-E
	No hazardous substances above the limits

EU REACH SVHC

REACH candidate substance (CAS No.)	No substance above 0.1 wt%

Phoenix Contact 2026 © - all rights reserved
https://www.phoenixcontact.com

Phoenix Contact USA
586 Fulling Mill Road
Middletown, PA 17057, United States
(+717) 944-1300
info@phoenixcon.com