PV-FT-CM-C-2,5-235-RD-FE - Device connector front mounting

1804107

https://www.phoenixcontact.com/us/products/1804107

Please be informed that the data shown in this PDF document is generated from our online catalog. Please find the complete data in the user documentation. Our general terms of use for downloads are valid.

CRIMP



Device connector front mounting, Range of articles: SUNCLIX, color: black, number of positions: 1, min. conductor cross-section: 2.5 mm^2, rated voltage: 1000 V DC, rated current: 27 A, Connection method: Crimp, cable length: 235

Commercial data

Item number	1804107
Packing unit	50 pc
Minimum order quantity	100 pc
Product key	ABLBAA
GTIN	4046356661041
Weight per piece (including packing)	15.822 g
Weight per piece (excluding packing)	15.822 g
Country of origin	DE

Technical data

Product properties

Product type	Panel feed-through
Product family	SUNCLIX
Number of positions	1
Pitch	0 mm

Insulation characteristics

Protection class	II
Degree of pollution	2

Connection data

Connection technology

Connection method	Crimp

Conductor connection

Tightening torque	1.8 Nm ±0.1 Nm

Dimensions

Dimensional drawing	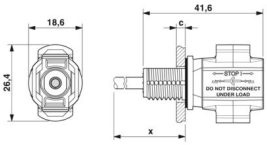
Width	18.6 mm
Height	18.6 mm
Length	60.5 mm
Pitch	-

Electrical properties

Rated voltage (III/2)	1000 V
Rated voltage	1000 V DC in accordance with IEC 62852:2014/AMD1:2020
Rated surge voltage (III/2)	12 kV
Rated current (2.5 mm²)	27 A (in accordance with IEC 62852:2014/AMD1:2020)
Contact resistance	0.45 mΩ
Contact resistance	≤ 0.45 mΩ (when plugged in (without cable))

Mechanical properties

Mechanical data

Insertion/withdrawal cycles	100
Insertion force	45 N ±10 N

Withdrawal force	250 N ±50 N (when locked)

Material specifications

Color	black
Color of the housing part	black
Material Housing	PPE
Material Contact carrier	PPE
Material Contact	Cu alloy (silver-plated)
Material Seal	EPDM
Material Contact surface	Ag
Flammability rating according to UL 94	V0
Insulating material group	III
Insulating material	mPPE
Contact surface	Silver Ag
Cable seal material	Elastosil LR 3065/50
Outer sheath, material	PE-X

Cable/line

Cable length	235 mm
Cable type	Stranded hook-up wire
Structure of individual litz in acc. with VDE 0295 / smallest wire diameter	50x0.25
Cable type	Hose line
Cable structure	50 x 0.25 mm Ø litz wires, tin-plated, 1x bunched
External cable diameter	4.25 mm ±0.15 mm
	4.25 mm 4.10 mm 4.40 mm ±0.15 mm
Outer sheath, material	PE-X
External sheath, color	red, similar to RAL 3000
Single wire, material	Cu
Single wire, cross section	2.5 mm²
Cable cross section	2.5 mm²
Nominal voltage, cable	1.8 kV DC (max U (conductor / conductor, ungrounded system))
Test voltage, cable	≥ 8 kV AC (Spark test online (standard designation))
Smallest bending radius, fixed installation	21.25 mm (5x Ø)
Smallest bending radius, movable installation	40.25 mm (10x Ø)
Cable pull-out force	> 80 N
Halogen-free	yes
Resistance to oil	no
Flame resistance	no

Environmental and real-life conditions

Ambient conditions

Degree of protection (when plugged in)	IP66/IP68 (2 m / 24 h)

Degree of protection (not plugged in)	IP20
Degree of protection	IP66/IP68 (2 m / 24 h)
Ambient temperature (operation) (male connector/female connector)	-40 °C ... 85 °C
Ambient temperature (assembly)	-25 °C ... 50 °C
Resistance to oil	no

Standards and regulations

Flame resistance	no
Resistance to oil	no
Standards/specifications	IEC 62852:2014/AMD1:2020

Drawings

Dimensional drawing

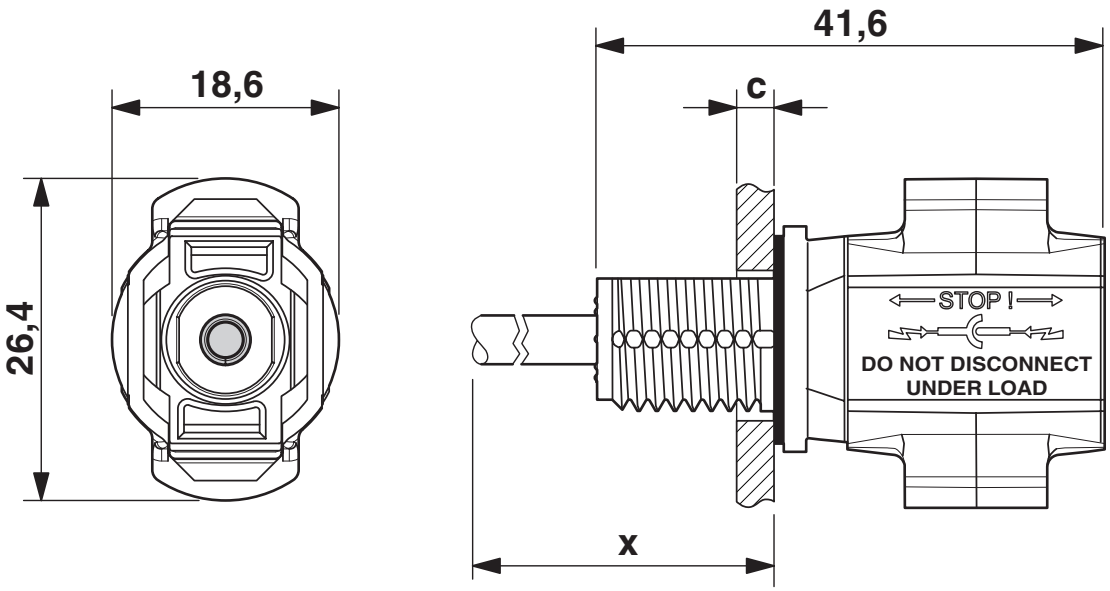

Dimension x = cable length
c: panel thickness - plastic: 2 - 6 mm; metal: 2 - 5 mm

Dimensional drawing

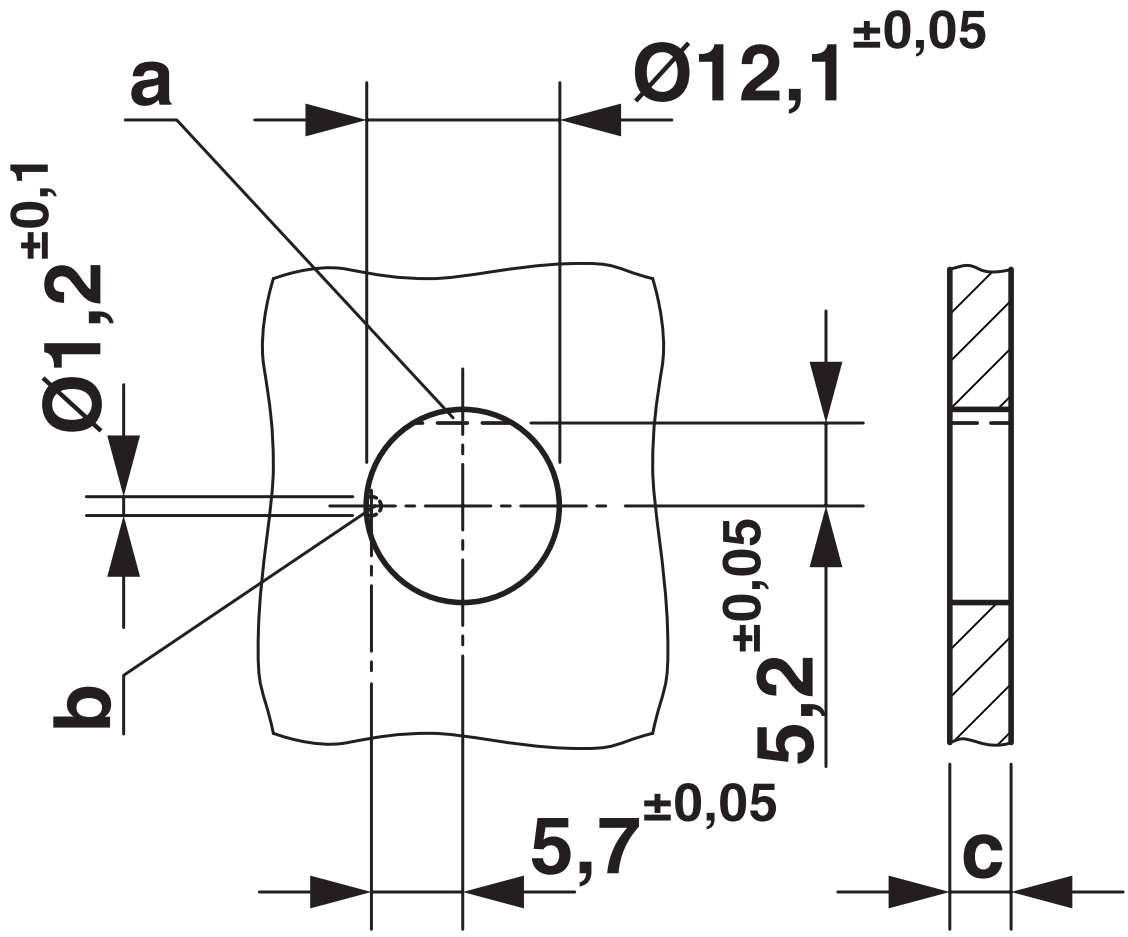

Approvals

To download certificates, visit the product detail page: https://www.phoenixcontact.com/us/products/1804107

TÜV Rheinland
Approval ID: R 60165003-0001

Classifications

ECLASS

ECLASS-13.0	27440107
ECLASS-15.0	27440107

ETIM

ETIM 10.0	EC002635

UNSPSC

UNSPSC 21.0	39121400

Environmental product compliance

EU RoHS

Fulfills EU RoHS substance requirements	Yes, No exemptions

China RoHS

Environment friendly use period (EFUP)	EFUP-E
	No hazardous substances above the limits

EU REACH SVHC

REACH candidate substance (CAS No.)	Triphenyl phosphate(CAS: 115-86-6)
SCIP	8639feda-02cc-4206-8623-9cf6e4d0d6d3

Phoenix Contact 2026 © - all rights reserved
https://www.phoenixcontact.com

Phoenix Contact USA
586 Fulling Mill Road
Middletown, PA 17057, United States
(+717) 944-1300
info@phoenixcon.com