KGS-MSTB 2,5/12 - Cable housing

1783818

https://www.phoenixcontact.com/us/products/1783818

Please be informed that the data shown in this PDF document is generated from our online catalog. Please find the complete data in the user documentation. Our general terms of use for downloads are valid.



Cable housing, color: green, product range: KGS-MSTB 2,5

Commercial data

Item number	1783818
Packing unit	10 pc
Minimum order quantity	10 pc
Sales key	AA08
Product key	AAHZDD
GTIN	4017918041991
Weight per piece (including packing)	20.009 g
Weight per piece (excluding packing)	19.85 g
Customs tariff number	39269097
Country of origin	PL

Technical data

Product properties

Product type	Cable housing
Product family	KGS-MSTB 2,5
Number of positions	12
Pitch	0 mm

Fitting of components

Partial assembly	No

Mounting

Cable clamp

Tightening torque	0.3 Nm

Material specifications

Color (Housing)	green (RAL 6021)
Insulating material	ABS
Insulating material group	I
CTI according to IEC 60112	600
Flammability rating according to UL 94	HB

Dimensions

Dimensional drawing	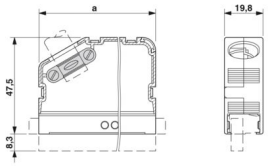
Pitch	-

Drawings

Dimensional drawing

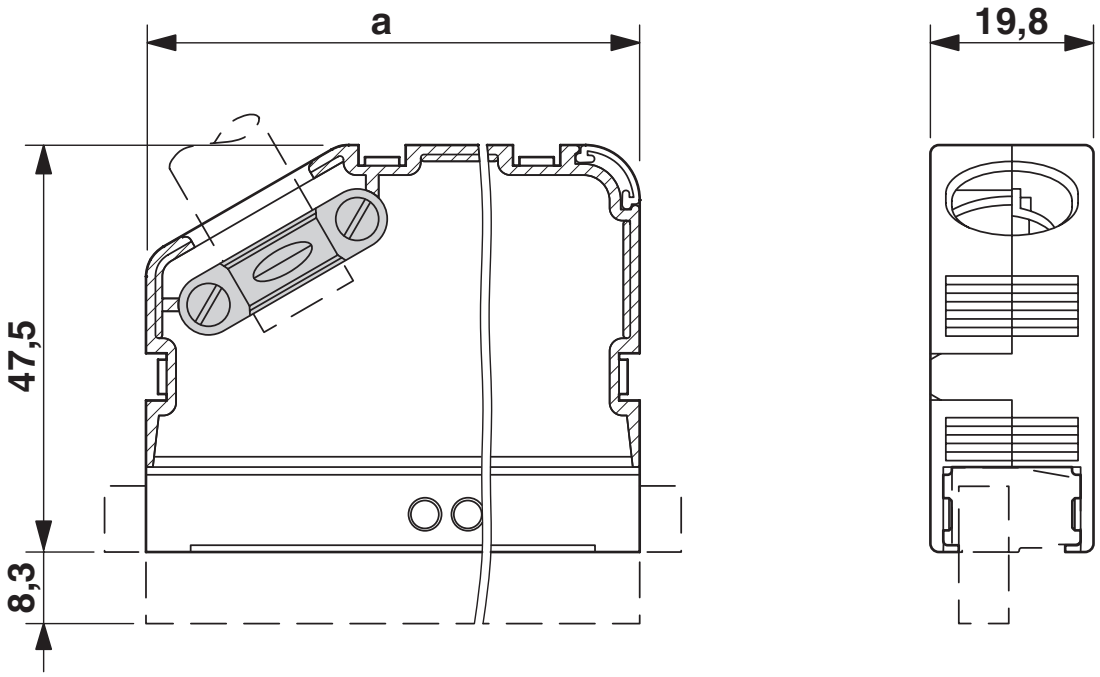

Classifications

ECLASS

ECLASS-13.0	27460402
ECLASS-15.0	27460402

ETIM

ETIM 10.0	EC002943

UNSPSC

UNSPSC 21.0	39121400

Environmental product compliance

EU RoHS

Fulfills EU RoHS substance requirements	Yes, No exemptions

China RoHS

Environment friendly use period (EFUP)	EFUP-E
	No hazardous substances above the limits

EU REACH SVHC

REACH candidate substance (CAS No.)	No substance above 0.1 wt%

EF3.1 Climate Change

CO2e kg	0.084 kg CO2e

Phoenix Contact 2026 © - all rights reserved
https://www.phoenixcontact.com

Phoenix Contact USA
586 Fulling Mill Road
Middletown, PA 17057, United States
(+717) 944-1300
info@phoenixcon.com