PV-FT-CM-C-4-300-RD-SP - Device connector front mounting

1705199

https://www.phoenixcontact.com/us/products/1705199

Please be informed that the data shown in this PDF document is generated from our online catalog. Please find the complete data in the user documentation. Our general terms of use for downloads are valid.

CRIMP



Device connector front mounting, Range of articles: SUNCLIX, color: black, number of positions: 1, min. conductor cross-section: 4 mm^2, rated current: 40 A, Connection method: Crimp, cable length: 300

Commercial data

Item number	1705199
Packing unit	50 pc
Minimum order quantity	50 pc
Sales key	BF19
Product key	ABLBAA
GTIN	4046356759342
Weight per piece (including packing)	22.776 g
Weight per piece (excluding packing)	22.776 g
Customs tariff number	85444290
Country of origin	DE

PV-FT-CM-C-4-300-RD-SP - Device connector front mounting

1705199

https://www.phoenixcontact.com/us/products/1705199

Technical data

Product properties

Product type	Panel feed-through
Product family	SUNCLIX
Number of positions	1

Insulation characteristics

Protection class	II
Degree of pollution	2

Connection data

Connection technology

Connection method	Crimp

Conductor connection

Tightening torque	1.8 Nm ±0.1 Nm

Dimensions

Dimensional drawing	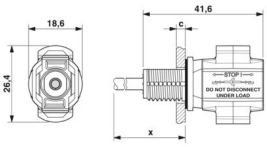
Width	18.6 mm
Height	26.3 mm
Length	41.5 mm

Electrical properties

Rated voltage (III/2)	1000 V
Rated surge voltage (III/2)	12 kV
Rated current (4.0 mm²)	40 A
Contact resistance	0.45 mΩ

Mechanical properties

Mechanical data

Insertion/withdrawal cycles	100
Insertion force	45 N ±10 N
Withdrawal force	250 N ±50 N

Material specifications

Color	black
Color of the housing part	black
Material Housing	PPE

Material Contact carrier	PPE
Material Contact	Cu
Material Seal	EPDM
Material Contact surface	Ag
Flammability rating according to UL 94	V0
Insulating material group	III
Insulating material	mPPE
Contact surface	Silver Ag
Cable seal material	Elastosil LR 3065/50
Outer sheath, material	PE-X

Cable/line

Cable length	300 mm
Cable type	S02
Structure of individual litz in acc. with VDE 0295 / smallest wire diameter	56x0.3
External cable diameter	4.60 mm ±0.15 mm
Outer sheath, material	PE-X
External sheath, color	red
Single wire, cross section	4 mm²
Cable pull-out force	> 80 N

Environmental and real-life conditions

Ambient conditions

Degree of protection (when plugged in)	IP66/IP68 (2 m / 24 h)
Degree of protection (not plugged in)	IP65
Ambient temperature (operation)	-40 °C ... 85 °C
Ambient temperature (assembly)	-25 °C ... 50 °C

Standards and regulations

Standards/specifications	IEC 62852:2014/AMD1:2020

PV-FT-CM-C-4-300-RD-SP - Device connector front mounting

1705199

https://www.phoenixcontact.com/us/products/1705199

Drawings

Dimensional drawing

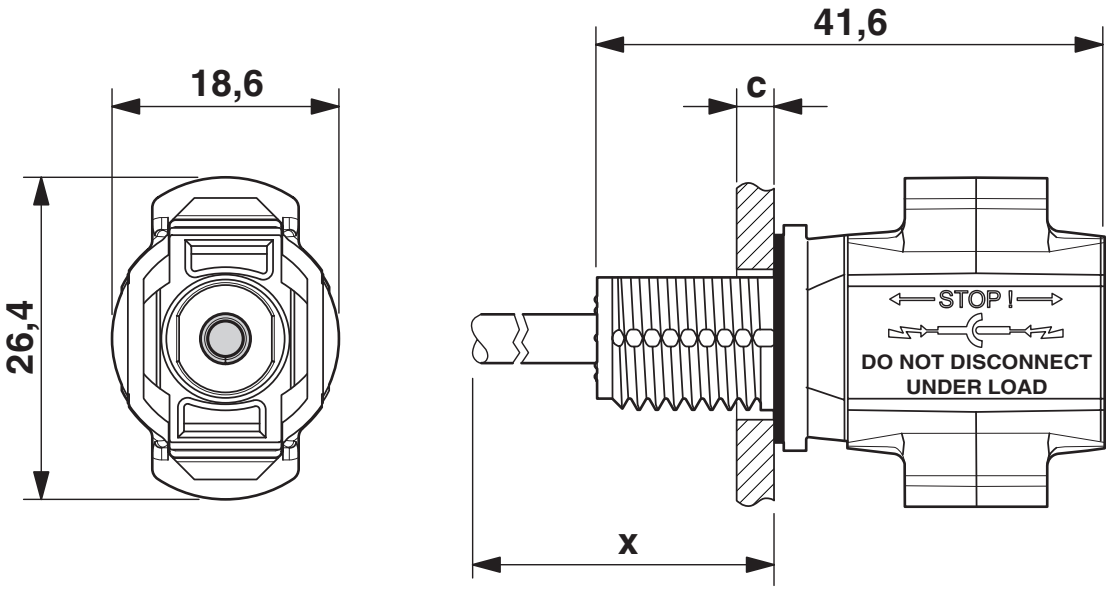

Dimension x = cable length
c: panel thickness - plastic: 2 - 6 mm; metal: 2 - 5 mm

Dimensional drawing

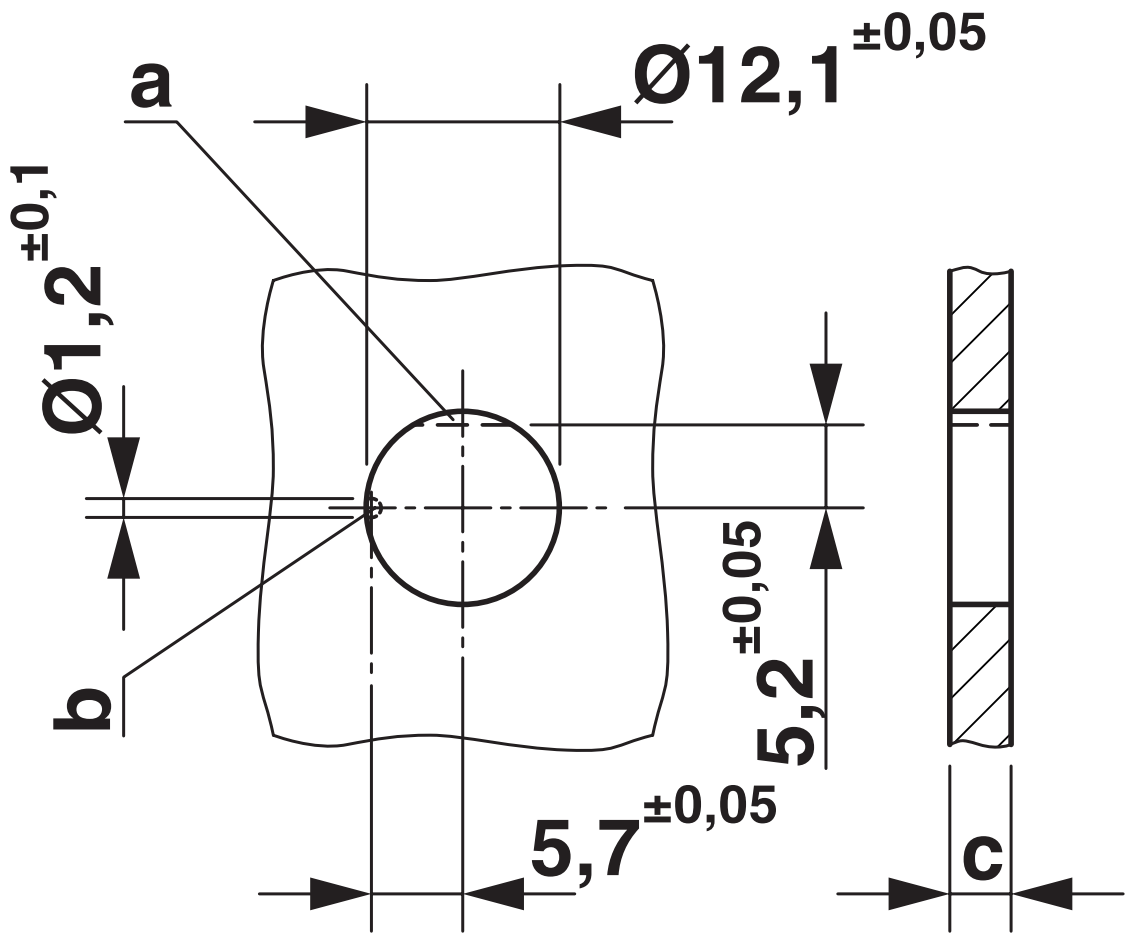

Approvals

To download certificates, visit the product detail page: https://www.phoenixcontact.com/us/products/1705199

TÜV Rheinland
Approval ID: R 60165003-0001

Classifications

ECLASS

ECLASS-13.0	27440107
ECLASS-15.0	27440107

ETIM

ETIM 10.0	EC002635

UNSPSC

UNSPSC 21.0	39121400

Environmental product compliance

EU RoHS

Fulfills EU RoHS substance requirements	Yes, No exemptions

China RoHS

Environment friendly use period (EFUP)	EFUP-E
	No hazardous substances above the limits

EU REACH SVHC

REACH candidate substance (CAS No.)	Triphenyl phosphate(CAS: 115-86-6)
SCIP	7fef0970-89a6-49be-bb04-b593e94b4d38

Phoenix Contact 2026 © - all rights reserved
https://www.phoenixcontact.com

Phoenix Contact USA
586 Fulling Mill Road
Middletown, PA 17057, United States
(+717) 944-1300
info@phoenixcon.com