# SAC-4P-M12MS/ 1,0-PUR/M12FS - Sensor/actuator cable

1699850

https://www.phoenixcontact.com/us/products/1699850

Please be informed that the data shown in this PDF document is generated from our online catalog. Please find the complete data in the user documentation. Our general terms of use for downloads are valid.



Sensor/actuator cable, 4-position, PUR halogen-free, black-gray RAL 7021, Plug straight M12, coding: A, on Socket straight M12, coding: A, cable length: 1 m

## Your advantages

- Easy and safe: 100 % electrically tested plug-in components

## Commercial data

| | |
|---|---|
| Item number | 1699850 |
| Packing unit | 1 pc |
| Minimum order quantity | 10 pc |
| Sales key | BF03 |
| Product key | AF1CCA |
| GTIN | 4017918571955 |
| Weight per piece (including packing) | 44 g |
| Weight per piece (excluding packing) | 41 g |
| Customs tariff number | 85444290 |
| Country of origin | DE |

## Technical data

### Product properties

| | |
|---|---|
| Product type | Sensor/actuator cable |
| Application | Standard |
| Number of positions | 4 |
| No. of cable outlets | 1 |
| Shielded | no |
| Coding | A |

Insulation characteristics

| | |
|---|---|
| Overvoltage category | II |
| Degree of pollution | 3 |

### Material specifications

| | |
|---|---|
| Flammability rating according to UL 94 | HB |
| Seal material | NBR |
| Material of grip body | TPU, hardly inflammable, self-extinguishing |
| Contact material | CuSn |
| Contact surface material | Ni/Au |
| Contact carrier material | TPU GF |
| Material for screw connection | Zinc die-cast, nickel-plated |

### Electrical properties

| | |
|---|---|
| Insulation resistance | ≥ 100 MΩ |
| Nominal voltage $U_N$ | 250 V AC |
| | 250 V DC |
| Nominal current $I_N$ | 4 A |

### Mechanical properties

Mechanical data

| | |
|---|---|
| Insertion/withdrawal cycles | ≥ 100 |

### Signaling

| | |
|---|---|
| Status display | no |
| Status display present | no |

### Connection data

Conductor connection

| | |
|---|---|
| Tightening torque | 0.4 Nm (M12 connector) |

### Connector

Connection 1

| | |
|---|---|
| Type | Plug straight M12 |
| Number of positions | 4 |
| Coding type | A |

Connection 2

| | |
|---|---|
| Type | Socket straight M12 |
| Number of positions | 4 |
| Coding type | A |

## Cable/line

| | |
|---|---|
| Cable length | 1 m |

PUR halogen-free black [PUR]

| | |
|---|---|
| Dimensional drawing | 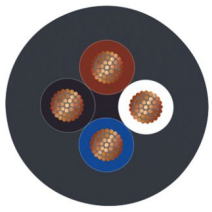 |
| Cable weight | 30 kg/km |
| UL AWM Style | 20549 / 10493 (80°C/300 V) |
| Number of positions | 4 |
| Shielded | no |
| Cable type | PUR halogen-free black [PUR] |
| Conductor structure signal line | 42x 0.10 mm |
| AWG signal line | 22 |
| Conductor cross-section | 4x 0.34 mm² (Signal line) |
| Wire diameter incl. insulation | 1.27 mm ±0.02 mm |
| External cable diameter | 4.20 mm ±0.15 mm |
| Outer sheath, material | PUR |
| External sheath, color | black-gray RAL 7021 |
| Conductor material | Bare Cu litz wires |
| Material wire insulation | PP |
| Single wire, color | brown, white, blue, black |
| Thickness, insulation | ≥ 0.21 mm |
| Thickness, outer sheath | approx. 0.50 mm |
| Overall twist | 4 wires, twisted |
| Max. conductor resistance | ≤ 58 Ω/km |
| Insulation resistance | ≥ 1 GΩ*km |
| Nominal voltage, cable | ≤ 300 V |
| Test voltage | ≥ 3000 V |
| Minimum bending radius, fixed installation | 5 x D |
| Minimum bending radius, flexible installation | 10 x D |

| | |
|---|---|
| Smallest bending radius, fixed installation | 21 mm |
| Smallest bending radius, movable installation | 42 mm |
| Dynamic load capacity (bending) | Max. bending cycles: 10000000, Bending radius: 42 mm, Bending radius: 10 x D, Traversing path: 10 m, Traversing rate: 3 m/s, Acceleration: 10 m/s² |
| Dynamic load capacity (torsion) | Torsion: ±180 °/m, Torsion cycles: ≥5000000, Torsional frequency: 35 cycles/min. |
| Halogen-free | in accordance with DIN VDE 0472 part 815 |
| | in accordance with DIN EN 50267-2-1 |
| Flame resistance | in accordance with UL 758/1581 FT2 |
| | DIN EN 60332-2-2 (20 s) |
| Resistance to oil | in accordance with DIN EN 60811-2-1 |
| Other resistance | Highly resistant to acids, alkaline solutions and solvents |
| | hydrolysis and microbe resistant |
| | partly UV-resistant (in accordance with DIN EN ISO 4892-2-A) |
| | Low adhesion |
| | abrasion-resistant |
| Special properties | Flexible cable conduit capable |
| | Silicone-free |
| | Free of substances which would hinder coating with paint or varnish |
| | flexible |
| Ambient temperature (operation) | -40 °C ... 80 °C (cable, fixed installation) |
| | -25 °C ... 80 °C (Cable, flexible installation) |

## Environmental and real-life conditions

### Ambient conditions

| | |
|---|---|
| Degree of protection | IP65 |
| | IP67 |
| | IP68 |
| Ambient temperature (operation) (male connector/female connector) | -25 °C ... 90 °C (Plug / socket) |
| Ambient temperature (operation) | -40 °C ... 80 °C (cable, fixed installation) |
| Ambient temperature (operation) (Cable, flexible installation) | -5 °C ... 80 °C (Cable, flexible installation) |

## Standards and regulations

| | |
|---|---|
| Standard designation | M12 connector |
| Standards/specifications | IEC 61076-2-101 |

## Drawings

Dimensional drawing

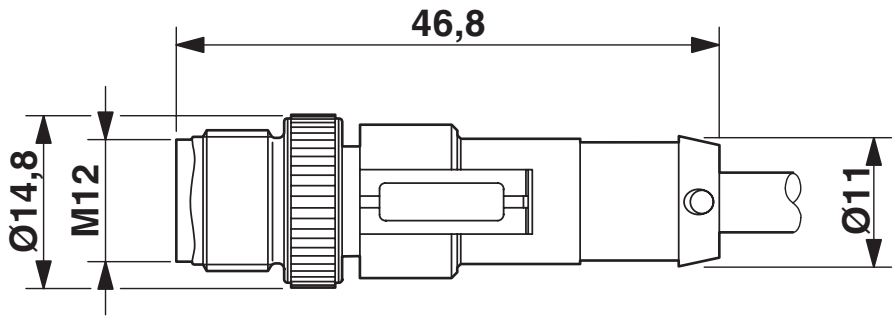


Plug, M12 x 1, straight, shielded

Dimensional drawing

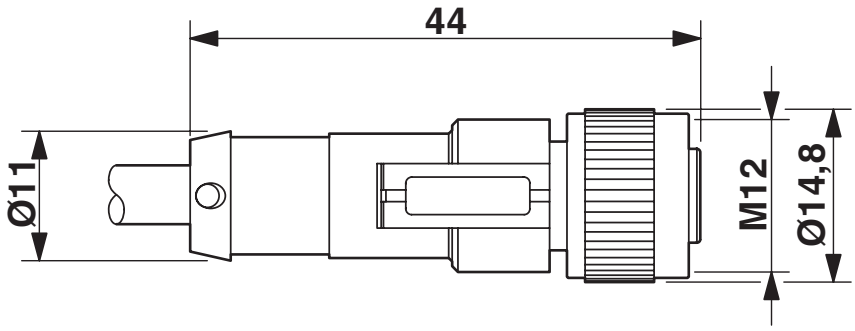


M12 x 1 socket, straight

Schematic diagram

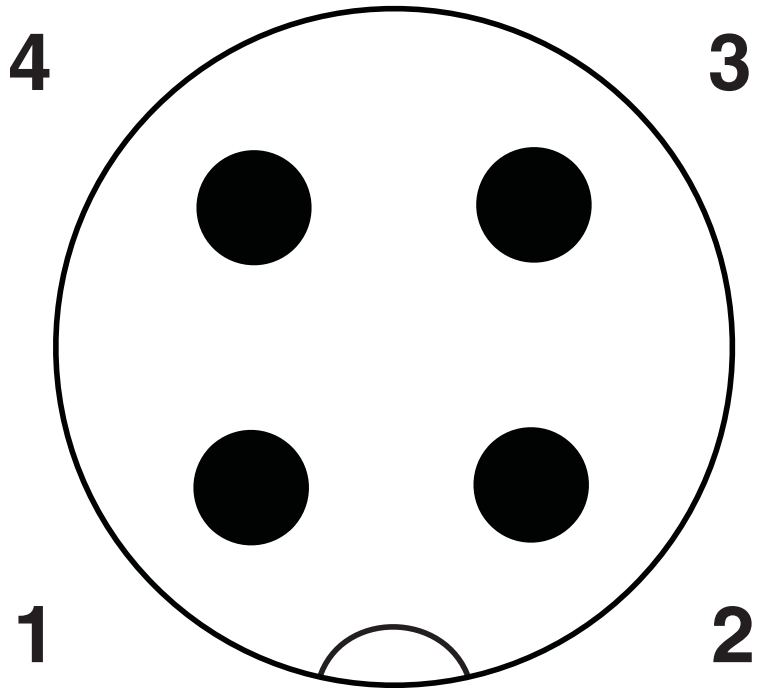


Pin assignment M12 plug, 4-pos., A-coded, view plug side

Schematic diagram

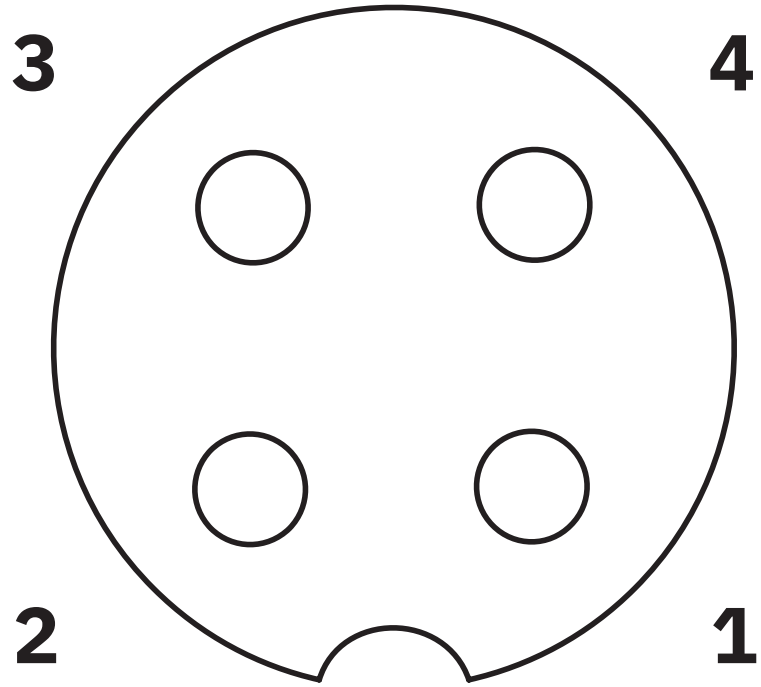


Pin assignment M12 socket, 4-pos., A-coded, view female side

Circuit diagram

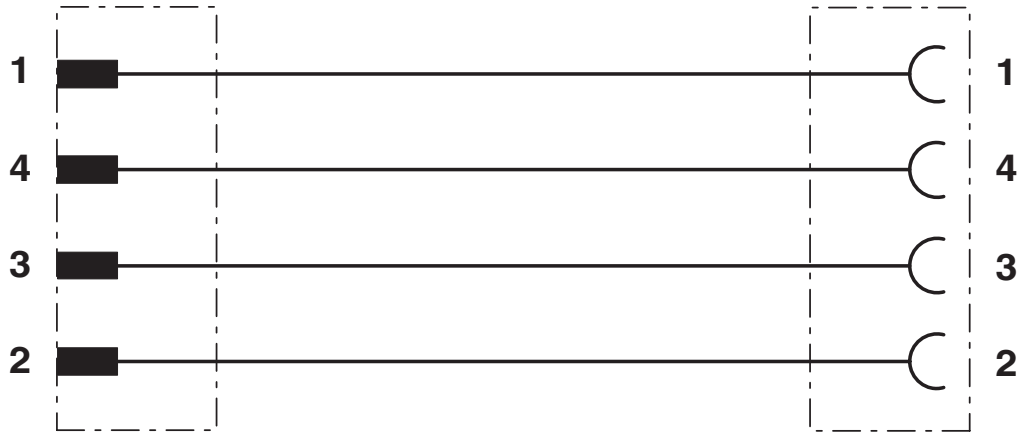


Contact assignment of the M12 plug and the M12 socket

## Approvals

To download certificates, visit the product detail page: https://www.phoenixcontact.com/us/products/1699850

**UL Listed**
Approval ID: FILE E 221474

| | Nominal voltage $U_N$ | Nominal current $I_N$ | Cross section AWG | Cross section $mm^2$ |
|---|---|---|---|---|
| keine | | | | |
| | 300 V | 4 A | - | - |

**cUL Listed**
Approval ID: FILE E 221474

| | Nominal voltage $U_N$ | Nominal current $I_N$ | Cross section AWG | Cross section $mm^2$ |
|---|---|---|---|---|
| keine | | | | |
| | 300 V | 4 A | - | - |

**EAC-RoHS**
Approval ID: RU D-DE.HB35.B.00387

## Classifications

### ECLASS

| | |
|---|---|
| ECLASS-13.0 | 27060311 |
| ECLASS-15.0 | 27060311 |

### ETIM

| | |
|---|---|
| ETIM 10.0 | EC001855 |

### UNSPSC

| | |
|---|---|
| UNSPSC 21.0 | 26121600 |

## Environmental product compliance

EU RoHS

| | |
|---|---|
| Fulfills EU RoHS substance requirements | Yes, No exemptions |

China RoHS

| | |
|---|---|
| Environment friendly use period (EFUP) | EFUP-E |
| | No hazardous substances above the limits |

EU REACH SVHC

| | |
|---|---|
| REACH candidate substance (CAS No.) | No substance above 0.1 wt% |

EF3.1 Climate Change

| | |
|---|---|
| CO2e kg | 0.311 kg CO2e |


Phoenix Contact 2026 © - all rights reserved
https://www.phoenixcontact.com



Phoenix Contact USA
586 Fulling Mill Road
Middletown, PA 17057, United States
(+717) 944-1300
info@phoenixcon.com