# SAC-5P-M12MS/ 1,5-PUR/M12FS VW - Sensor/actuator cable

1694059

https://www.phoenixcontact.com/us/products/1694059

Please be informed that the data shown in this PDF document is generated from our online catalog. Please find the complete data in the user documentation. Our general terms of use for downloads are valid.

Sensor/actuator cable, 5-position, PUR halogen-free, irradiated, orange RAL 2003, Plug straight M12, coding: A, on Socket straight M12, coding: A, cable length: 1.5 m, Customer version

## Commercial data

| | |
|---|---|
| Item number | 1694059 |
| Packing unit | 1 pc |
| Minimum order quantity | 1 pc |
| Sales key | BF03 |
| Product key | AF1CDA |
| GTIN | 4017918221591 |
| Weight per piece (including packing) | 79.2 g |
| Weight per piece (excluding packing) | 77.4 g |
| Customs tariff number | 85444290 |
| Country of origin | PL |

# Technical data

## Product properties

| | |
|---|---|
| Product type | Sensor/actuator cable |
| Number of positions | 5 |
| No. of cable outlets | 1 |
| Shielded | no |
| Coding | A |

### Insulation characteristics

| | |
|---|---|
| Overvoltage category | II |
| Degree of pollution | 3 |

## Material specifications

| | |
|---|---|
| Flammability rating according to UL 94 | HB |
| Seal material | NBR |
| Material of grip body | TPU, hardly inflammable, self-extinguishing |
| Contact material | CuSn |
| Contact surface material | Ni/Au |
| Contact carrier material | TPU GF |
| Material for screw connection | Zinc die-cast, nickel-plated |

## Electrical properties

| | |
|---|---|
| Insulation resistance | ≥ 100 MΩ |
| Nominal voltage $U_N$ | 48 V AC |
| | 60 V DC |
| Nominal current $I_N$ | 4 A |

## Mechanical properties

### Mechanical data

| | |
|---|---|
| Insertion/withdrawal cycles | ≥ 100 |

## Signaling

| | |
|---|---|
| Status display | no |
| Status display present | no |

## Connector

### Connection 1

| | |
|---|---|
| Type | Plug straight M12 |
| Number of positions | 5 |
| Coding type | A |

### Connection 2

| | |
|---|---|
| Type | Socket straight M12 |

| | |
|---|---|
| Number of positions | 5 |
| Coding type | A |

## Cable/line

| | |
|---|---|
| Cable length | 1.5 m |

PUR irradiated halogen-free orange [150]

| | |
|---|---|
| Dimensional drawing | |
| Number of positions | 5 |
| Shielded | no |
| Cable type | PUR irradiated halogen-free orange [150] |
| Conductor structure signal line | 42x 0.10 mm |
| AWG signal line | 22 |
| Conductor structure, voltage supply | 24x 0.15 mm |
| AWG power supply | 20 |
| Conductor cross-section | 4x 0.34 mm² (Signal line) |
| | 1x 0.5 mm² (PE connection) |
| External cable diameter | 5.20 mm ±0.2 mm |
| Outer sheath, material | PUR |
| External sheath, color | orange RAL 2003 |
| Conductor material | Bare Cu litz wires |
| Material wire insulation | PE |
| Single wire, color | brown, white, blue, black, green-yellow |
| Overall twist | 5 cores, twisted |
| Max. conductor resistance | ≤ 57.5 Ω/km (with 0.34 mm² conductor cross-section) |
| | ≤ 39 Ω/km (with 0.5 mm² conductor cross-section) |
| Nominal voltage, cable | 250 V (AC) |
| Test voltage | 2000 V (50 Hz, 5 minutes) |
| Smallest bending radius, fixed installation | 20 mm |
| Smallest bending radius, movable installation | 30 mm |
| Dynamic load capacity (bending) | Max. bending cycles: 5000000, Bending radius: 52 mm, Traversing path: 10 m, Traversing rate: 3 m/s |
| Halogen-free | The cable is halogen-free |
| Flame resistance | DIN VDE 0472 part 804, test type B |
| Other resistance | hydrolysis and microbe resistant |
| | UV resistant |
| | Resistant to welding splashes |

| | |
|---|---|
| Special properties | Silicone-free |
| | Irradiated |
| Ambient temperature (operation) | -50 °C ... 105 °C (cable, fixed installation) |
| | -40 °C ... 105 °C (Cable, flexible installation) |

## Environmental and real-life conditions

### Ambient conditions

| | |
|---|---|
| Degree of protection | IP65 |
| | IP67 |
| | IP68 |
| Ambient temperature (operation) (male connector/female connector) | -25 °C ... 90 °C (Plug / socket) |
| Ambient temperature (operation) (Cable, fixed installation) | -50 °C ... 105 °C (cable, fixed installation) |
| Ambient temperature (operation) (flexible installation) | -40 °C ... 105 °C (Cable, flexible installation) |

## Drawings

Dimensional drawing

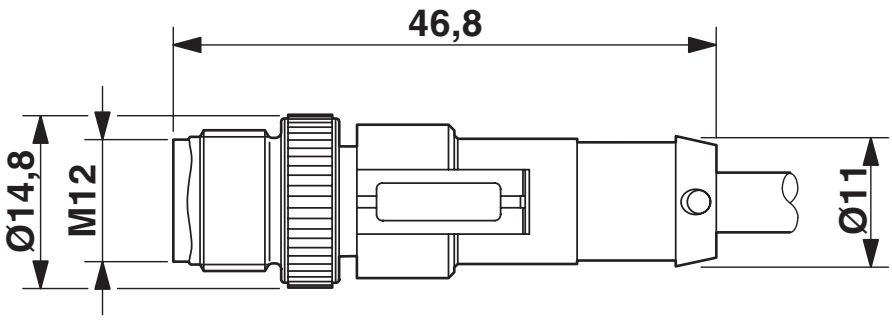


Plug, M12 x 1, straight, shielded

Dimensional drawing

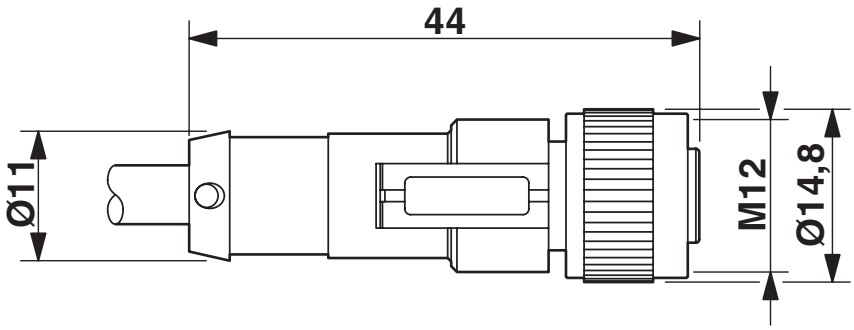


M12 x 1 socket, straight

Schematic diagram

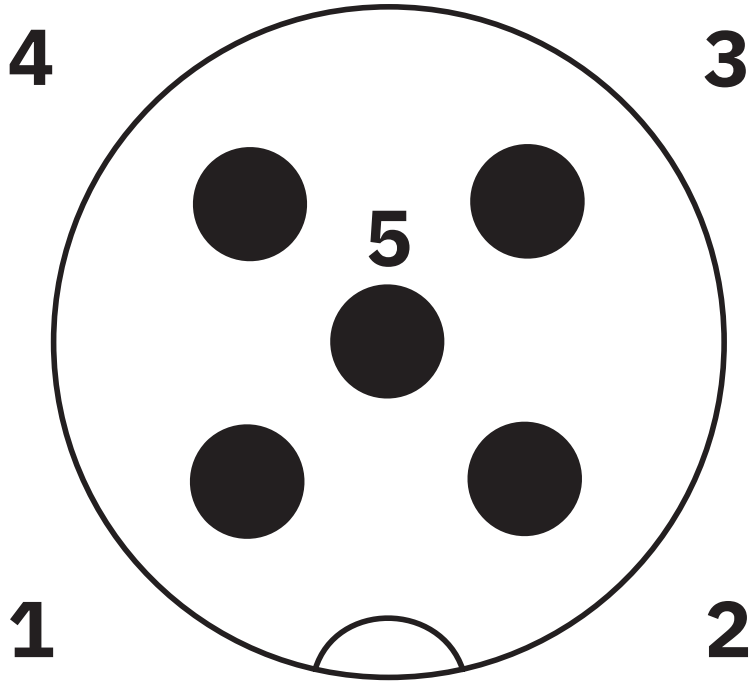


Pin assignment M12 male connector, 5-pos., A-coded, male side

Schematic diagram

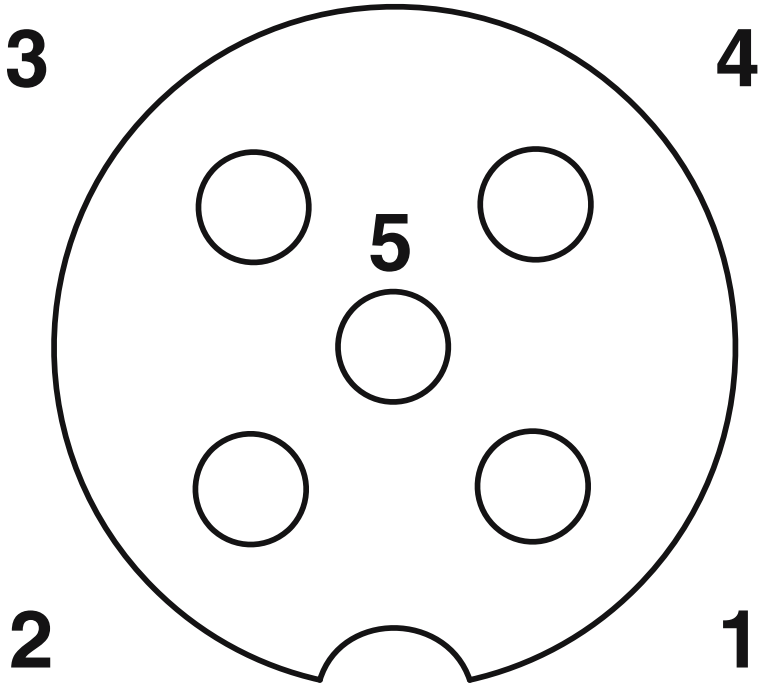


Pin assignment M12 socket, 5-pos., A-coded, socket side view

Circuit diagram

Contact assignment of the M12 plug and the M12 socket

## Approvals

To download certificates, visit the product detail page: https://www.phoenixcontact.com/us/products/1694059

**UL Listed**
Approval ID: FILE E 221474

| | Nominal voltage $U_N$ | Nominal current $I_N$ | Cross section AWG | Cross section $mm^2$ |
|---|---|---|---|---|
| keine | | | | |
| | 125 V | 4 A | - | - |

**cUL Listed**
Approval ID: FILE E 221474

| | Nominal voltage $U_N$ | Nominal current $I_N$ | Cross section AWG | Cross section $mm^2$ |
|---|---|---|---|---|
| keine | | | | |
| | 125 V | 4 A | - | - |

**EAC-RoHS**
Approval ID: RU D-DE.HB35.B.00387

## Classifications

### ECLASS

| | |
|---|---|
| ECLASS-13.0 | 27060311 |
| ECLASS-15.0 | 27060311 |

### ETIM

| | |
|---|---|
| ETIM 10.0 | EC001855 |

### UNSPSC

| | |
|---|---|
| UNSPSC 21.0 | 26121600 |

## Environmental product compliance

EU RoHS

| | |
|---|---|
| Fulfills EU RoHS substance requirements | Yes, No exemptions |

China RoHS

| | |
|---|---|
| Environment friendly use period (EFUP) | EFUP-E |
| | No hazardous substances above the limits |

EU REACH SVHC

| | |
|---|---|
| REACH candidate substance (CAS No.) | No substance above 0.1 wt% |

EF3.1 Climate Change

| | |
|---|---|
| CO2e kg | 3.806 kg CO2e |

Phoenix Contact 2026 © - all rights reserved
https://www.phoenixcontact.com

Phoenix Contact USA
586 Fulling Mill Road
Middletown, PA 17057, United States
(+717) 944-1300
info@phoenixcon.com