SAC-5P-M12MS/ 1,5-PUR/M12FR3LVW - Sensor/actuator cable

1693979

https://www.phoenixcontact.com/us/products/1693979

Please be informed that the data shown in this PDF document is generated from our online catalog. Please find the complete data in the user documentation. Our general terms of use for downloads are valid.

Sensor/actuator cable, 5-position, PUR halogen-free, irradiated, orange RAL 2003, Plug straight M12, coding: A, with 3 LEDs, on Socket angled M12, coding: A, with 3 LEDs, cable length: 1.5 m, Customer-specific version

Commercial data

Item number	1693979
Packing unit	1 pc
Minimum order quantity	1 pc
Sales key	BF03
Product key	AF1CDA
GTIN	4017918481698
Weight per piece (including packing)	79.1 g
Weight per piece (excluding packing)	79.3 g
Customs tariff number	85444290
Country of origin	PL

Technical data

Product properties

Product type	Sensor/actuator cable
Number of positions	5
No. of cable outlets	1
Shielded	no
Coding	A

Insulation characteristics

Overvoltage category	II
Degree of pollution	3

Material specifications

Flammability rating according to UL 94	HB
Seal material	NBR
Material of grip body	TPU, hardly inflammable, self-extinguishing
Contact material	CuSn
Contact surface material	Ni/Au
Contact carrier material	TPU GF
Material for screw connection	Zinc die-cast, nickel-plated

Electrical properties

Rated voltage in acc. with IEC 61076-2-101	60 V
Insulation resistance	≥ 100 MΩ
Nominal voltage U_N	24 V
Nominal current I_N	4 A

Mechanical properties

Mechanical data

Insertion/withdrawal cycles	≥ 100

Signaling

Status display	3 LEDs
Status display present	yes

Connector

Connection 1

Type	Plug straight M12
Number of positions	5
Coding type	A

Connection 2

Type	Socket angled M12
Number of positions	5
Coding type	A

Cable/line

Cable length	1.5 m

PUR irradiated halogen-free orange [150]

Dimensional drawing	
Number of positions	5
Shielded	no
Cable type	PUR irradiated halogen-free orange [150]
Conductor structure signal line	42x 0.10 mm
AWG signal line	22
Conductor structure, voltage supply	24x 0.15 mm
AWG power supply	20
Conductor cross-section	4x 0.34 mm² (Signal line)
	1x 0.5 mm² (PE connection)
External cable diameter	5.20 mm ±0.2 mm
Outer sheath, material	PUR
External sheath, color	orange RAL 2003
Conductor material	Bare Cu litz wires
Material wire insulation	PE
Single wire, color	brown, white, blue, black, green-yellow
Overall twist	5 cores, twisted
Max. conductor resistance	≤ 57.5 Ω/km (with 0.34 mm² conductor cross-section)
	≤ 39 Ω/km (with 0.5 mm² conductor cross-section)
Nominal voltage, cable	250 V (AC)
Test voltage	2000 V (50 Hz, 5 minutes)
Smallest bending radius, fixed installation	20 mm
Smallest bending radius, movable installation	30 mm
Dynamic load capacity (bending)	Max. bending cycles: 5000000, Bending radius: 52 mm, Traversing path: 10 m, Traversing rate: 3 m/s
Halogen-free	The cable is halogen-free
Flame resistance	DIN VDE 0472 part 804, test type B

Other resistance	hydrolysis and microbe resistant
	UV resistant
	Resistant to welding splashes
Special properties	Silicone-free
	Irradiated
Ambient temperature (operation)	-50 °C ... 105 °C (cable, fixed installation)
	-40 °C ... 105 °C (Cable, flexible installation)

Environmental and real-life conditions

Ambient conditions

Degree of protection	IP65
	IP67
	IP68
Ambient temperature (operation) (male connector/female connector)	-25 °C ... 90 °C (Plug / socket)
Ambient temperature (operation) (Cable, fixed installation)	-50 °C ... 105 °C (cable, fixed installation)
Ambient temperature (operation) (flexible installation)	-40 °C ... 105 °C (Cable, flexible installation)

Drawings

Dimensional drawing

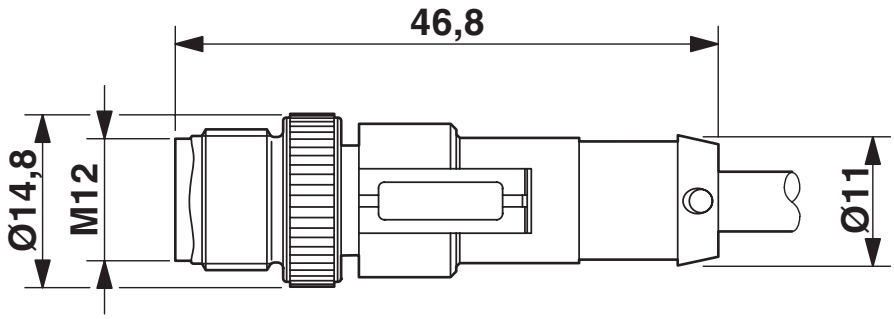

Plug, M12 x 1, straight, shielded

Dimensional drawing

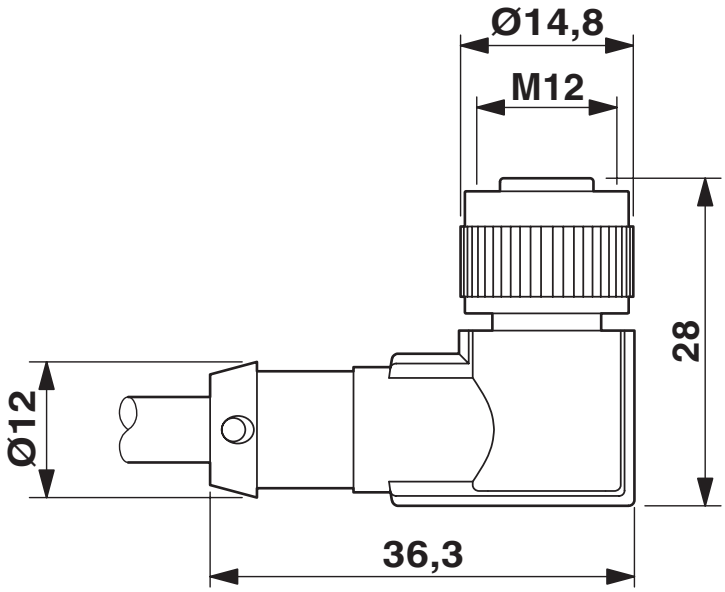

M12 x 1 socket, angled

Schematic diagram

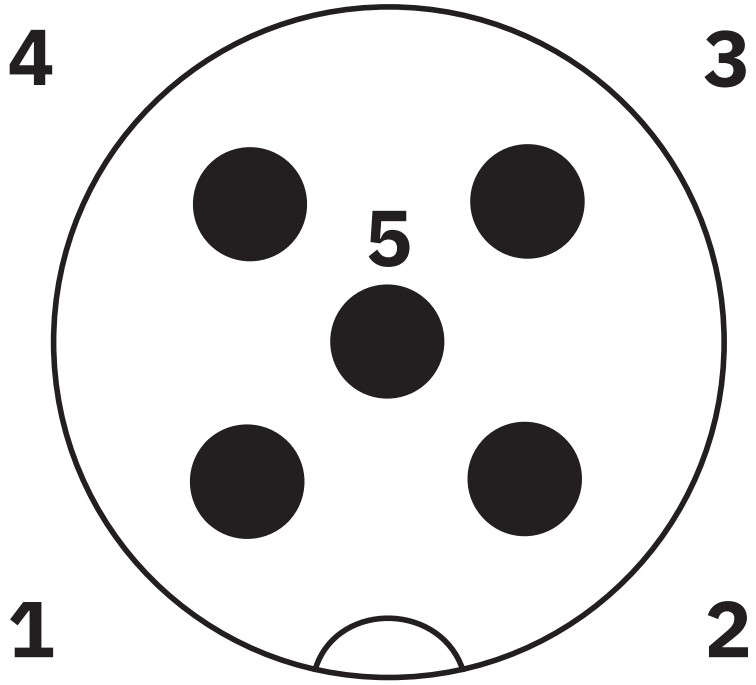

Pin assignment M12 male connector, 5-pos., A-coded, male side

Schematic diagram

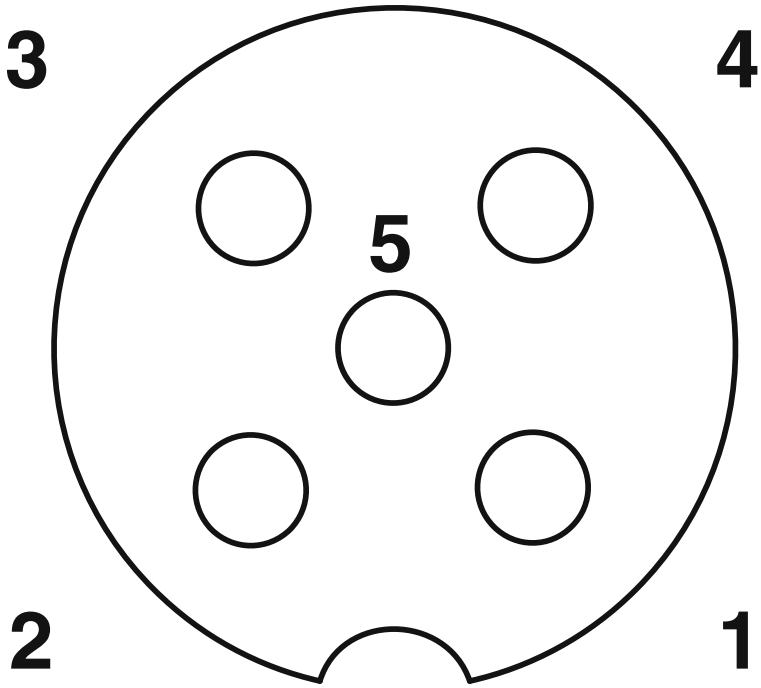

Pin assignment M12 socket, 5-pos., A-coded, socket side view

Approvals

To download certificates, visit the product detail page: https://www.phoenixcontact.com/us/products/1693979

UL Listed
Approval ID: FILE E 221474

	Nominal voltage U_N	Nominal current I_N	Cross section AWG	Cross section mm^2
keine				
	24 V	4 A	-	-

cUL Listed
Approval ID: FILE E 221474

	Nominal voltage U_N	Nominal current I_N	Cross section AWG	Cross section mm^2
keine				
	24 V	4 A	-	-

EAC-RoHS
Approval ID: RU D-DE.HB35.B.00387

Classifications

ECLASS

ECLASS-13.0	27060311
ECLASS-15.0	27060311

ETIM

ETIM 10.0	EC001855

UNSPSC

UNSPSC 21.0	26121600

Environmental product compliance

EU RoHS

Fulfills EU RoHS substance requirements	Yes, No exemptions

China RoHS

Environment friendly use period (EFUP)	EFUP-E
	No hazardous substances above the limits

EU REACH SVHC

REACH candidate substance (CAS No.)	No substance above 0.1 wt%

EF3.1 Climate Change

CO2e kg	3.88 kg CO2e

Phoenix Contact 2026 © - all rights reserved
https://www.phoenixcontact.com

Phoenix Contact USA
586 Fulling Mill Road
Middletown, PA 17057, United States
(+717) 944-1300
info@phoenixcon.com