VS-09-A-GC-ST/ST - Panel-mount frame

1689705

https://www.phoenixcontact.com/us/products/1689705

Please be informed that the data shown in this PDF document is generated from our online catalog. Please find the complete data in the user documentation. Our general terms of use for downloads are valid.



D-SUB panel mounting frame, shell size 1, with nine signal contacts, pin, gender changer, shielded, IP67 degree of protection

Commercial data

Item number	1689705
Packing unit	5 pc
Minimum order quantity	1 pc
Sales key	AB19
Product key	ABNCBC
GTIN	4017918929053
Weight per piece (including packing)	18.21 g
Weight per piece (excluding packing)	18.21 g
Customs tariff number	85366990
Country of origin	DE

Technical data

Notes

Safety note

Safety note	WARNING: The connectors may not be plugged in or disconnected under load. Ignoring the warning or improper use may damage persons and/or property.
	• WARNING: Commission properly functioning products only. The products must be regularly inspected for damage. Decommission defective products immediately. Replace damaged products. Repairs are not possible.
	• WARNING: Only electrically qualified personnel may install and operate the product. They must observe the following safety notes. The qualified personnel must be familiar with the basics of electrical engineering. They must be able to recognize and prevent danger. The relevant symbol on the packaging indicates that only personnel familiar with electrical engineering are allowed to install and operate the product.
	• The products are suitable for applications in plant, controller, and electrical device engineering.
	• When operating the connectors in outdoor applications, they must be separately protected against environmental influences.
	• Assembled products may not be manipulated or improperly opened.
	• Only use mating connectors that are specified in the technical data of the standards listed (e.g. the ones listed in the product accessories online at phoenixcontact.com/products).
	• When using the product in direct connection with third-party manufacturers, the user is responsible.
	• For operating voltages > 50 V AC, conductive connector housings must be grounded
	• Only use tools recommended by Phoenix Contact
	• The installation notes/Design In documents online on the download page at phoenixcontact.com/products must be observed for this product.
	• Use a protective cap to protect connectors that are not in use. The suitable accessories are available online in the accessory section of the product at phoenixcontact.com/products
	• Operate the connector only when it is fully plugged in and interlocked.
	• Operate the connector only when it is fully plugged in.
	• Ensure that when laying the cable, the tensile load on the connectors does not exceed the upper limit specified in the standards.
	• Observe the minimum bending radius of the cable. Lay the cable without twisting it.
	• VDE 0100/1.97 § 411.1.3.2 and DIN EN 60 204/11.98 § 14.1.3 are applicable when combining several circuits in a cable and/or connector

Product properties

Product type	Panel-mount frame
Application	Gender changer
Type	Shell size 1
Number of positions	9
Connection profile	D-SUB

Insulation characteristics

Overvoltage category	III
Degree of pollution	2

Electrical properties

Rated voltage (III/3)	125 V
Rated current	5 A
Transmission medium	Copper

Dimensions

Dimensional drawing	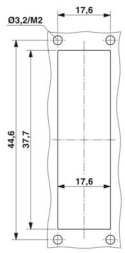
Width	24 mm
Height	27.9 mm
Length	54 mm

Material specifications

Color	gray
Material	Plastic
Flammability rating according to UL 94	V0
Seal material	Flat gasket: NBR; profile gasket: EPDM
Housing material	Plastic
Housing surface material	PA, light gray
Contact material	Copper alloy
Contact surface material	Au/Ni
Contact carrier material	Polyester GF

Mechanical properties

Mechanical data

Insertion/withdrawal cycles	≥ 200

Environmental and real-life conditions

Ambient conditions

Degree of protection	IP65/IP67
Ambient temperature (operation)	-40 °C ... 80 °C

Mounting

Mounting type	Front mounting

Drawings

Dimensional drawing

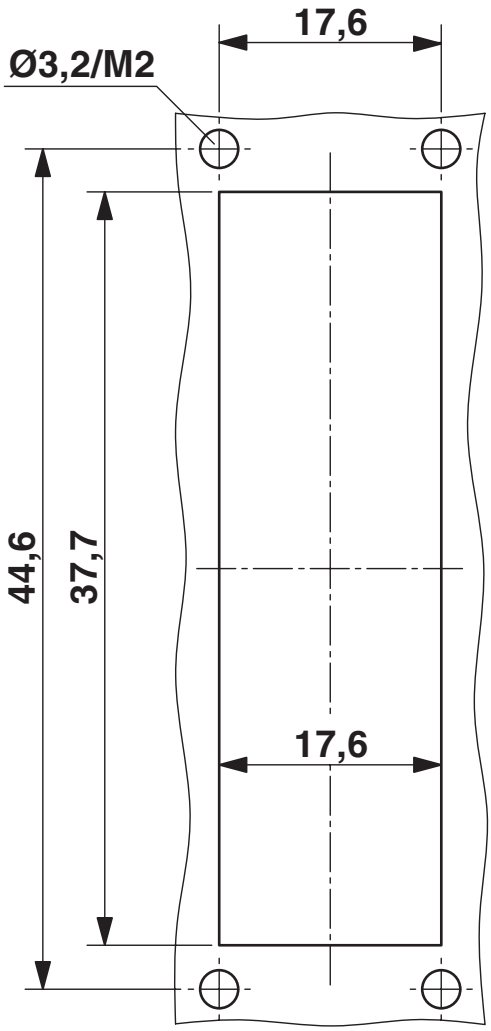

Mounting cutout: VS-09-A...

Classifications

ECLASS

ECLASS-13.0	27440302
ECLASS-15.0	27440210

ETIM

ETIM 10.0	EC002310

UNSPSC

UNSPSC 21.0	39121400

Environmental product compliance

EU RoHS

Fulfills EU RoHS substance requirements	Yes, No exemptions

China RoHS

Environment friendly use period (EFUP)	EFUP-E
	No hazardous substances above the limits

EU REACH SVHC

REACH candidate substance (CAS No.)	No substance above 0.1 wt%

EF3.1 Climate Change

CO2e kg	0.519 kg CO2e

Phoenix Contact 2026 © - all rights reserved
https://www.phoenixcontact.com

Phoenix Contact USA
586 Fulling Mill Road
Middletown, PA 17057, United States
(+717) 944-1300
info@phoenixcon.com