SAC-5P- 5,0-PUR/M12FR SH - Sensor/actuator cable

1682980

https://www.phoenixcontact.com/us/products/1682980

Please be informed that the data shown in this PDF document is generated from our online catalog. Please find the complete data in the user documentation. Our general terms of use for downloads are valid.

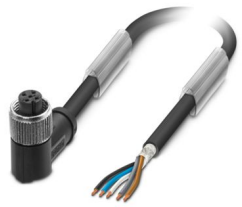

Sensor/actuator cable, 5-position, PUR halogen-free, black-gray RAL 7021, shielded (Advanced Shielding Technology), free cable end, on Socket angled M12, coding: A, cable length: 5 m

Your advantages

- Easy and safe: 100 % electrically tested plug-in components
- Reliable signal transmission – 360° shielding in environments with electromagnetic interference

Commercial data

Item number	1682980
Packing unit	1 pc
Minimum order quantity	1 pc
Sales key	BF03
Product key	AF1CKA
GTIN	4017918169268
Weight per piece (including packing)	234 g
Weight per piece (excluding packing)	222 g
Customs tariff number	85444290
Country of origin	PL

Technical data

Product properties

Product type	Sensor/actuator cable
Application	Standard
Number of positions	5
No. of cable outlets	1
Shielded	yes
Coding	A

Insulation characteristics

Overvoltage category	II
Degree of pollution	3

Material specifications

Flammability rating according to UL 94	HB
Seal material	NBR
Material of grip body	TPU, hardly inflammable, self-extinguishing
Contact material	CuSn
Contact surface material	Ni/Au
Contact carrier material	TPU GF
Material for screw connection	Zinc die-cast, nickel-plated

Electrical properties

Insulation resistance	≥ 100 MΩ
Nominal voltage U_N	48 V AC
	60 V DC
Nominal current I_N	4 A

Mechanical properties

Mechanical data

Insertion/withdrawal cycles	≥ 100

Signaling

Status display	no
Status display present	no

Connection data

Conductor connection

Tightening torque	0.4 Nm (M12 connector)

Connector

Connection 1

Type	free cable end

Connection 2

Type	Socket angled M12
Number of positions	5
Coding type	A

Cable/line

Cable length	5 m

PUR halogen-free black [PUR]

Dimensional drawing	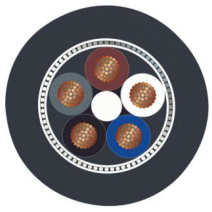
Cable weight	43 kg/km
UL AWM Style	20549 / 10493 (80°C/300 V)
Number of positions	5
Shielded	yes
Cable type	PUR halogen-free black [PUR]
Conductor structure signal line	42x 0.10 mm
AWG signal line	22
Conductor cross-section	5x 0.34 mm² (Signal line)
Wire diameter incl. insulation	1.27 mm ±0.05 mm (Signal line)
External cable diameter	5.30 mm ±0.25 mm
Outer sheath, material	PUR
External sheath, color	black-gray RAL 7021
Conductor material	Bare Cu litz wires
Material wire insulation	PP
Single wire, color	brown, white, blue, black, gray
Thickness, insulation	≥ 0.21 mm
Thickness, outer sheath	approx. 0.50 mm
Overall twist	5 wires around filler to the core
Optical shield covering	80 %
Max. conductor resistance	max. 57 Ω/km (at 20 °C)
Insulation resistance	70 GΩ*km (at 20 °C)
Nominal voltage, cable	300 V (at 20 °C)
Test voltage Core/Core	3000 V (at 20 °C)
Smallest bending radius, fixed installation	26 mm
Smallest bending radius, movable installation	52 mm (up to +60 °C)
Dynamic load capacity (bending)	Max. bending cycles: 10000000, Bending radius: 52 mm,

	Traversing path: 10 m, Traversing rate: 3 m/s, Acceleration: 10 m/s²
Dynamic load capacity (torsion)	Torsion: ±180 °/m, Torsion cycles: ≥5000000, Torsional frequency: 35 cycles/min.
Halogen-free	in accordance with DIN VDE 0472 part 815
	in accordance with DIN EN 50267-2-1
Flame resistance	in accordance with UL 758/1581 FT2
	DIN EN 60332-2-2 (20 s)
Resistance to oil	in accordance with DIN EN 60811-2-1
Other resistance	Highly resistant to acids, alkaline solutions and solvents
	hydrolysis and microbe resistant
	Resistant to salt water
	partly UV-resistant (in accordance with DIN EN ISO 4892-2-A)
	abrasion-resistant
Special properties	Flexible cable conduit capable
	Silicone-free
	Free of substances which would hinder coating with paint or varnish
	Low adhesion surface
Ambient temperature (operation)	-40 °C ... 80 °C (cable, fixed installation)
	-25 °C ... 80 °C (Cable, flexible installation)

Environmental and real-life conditions

Ambient conditions

Degree of protection	IP65
	IP67
Ambient temperature (operation) (male connector/female connector)	-25 °C ... 90 °C (Plug / socket)
Ambient temperature (operation) (Cable, fixed installation)	-25 °C ... 80 °C (cable, fixed installation)
Ambient temperature (operation) (Cable, flexible installation)	-5 °C ... 80 °C (Cable, flexible installation)
Specification	IEC 60512-6-4:2002-02
	IEC 60512-1-1:2002-02
	IEC 60512-2-1:2002-02
	IEC 60512-2-5:2003-05
Contact disturbance requirement	Duration of the disturbance: max. 1 µs
Requirements, Contact resistance	Resistance difference ΔR ≤ 15 mΩ (for each channel)
Requirements, visual check	No defects that impair normal functionality.
Lowest frequency	10 Hz
Highest frequency	500 Hz
Amplitude	0.35 mm
Acceleration	5g
Sweep speed	1 octave/min
No. of cycles	10
Test directions	X-, Y- and Z-axis

Shock

Specification	IEC 60512-6-3:2002-02
	IEC 60512-1-1:2002-02
	IEC 60512-2-1:2002-02
	IEC 60512-2-5:2003-05
Contact disturbance requirement	Duration of the disturbance: max. 1 µs
Requirements, Contact resistance	Resistance difference ΔR ≤ 15 mΩ (for each channel)
Requirements, visual check	No defects that impair normal functionality.
Acceleration	50g
Test directions	X-, Y- and Z-axis
Pulse shape	Half-sine
Number of shocks per direction	3
Duration of the nominal shock	11 ms
Specification	IEC 60512-11-4:2002-02
	IEC 60512-1-1:2002-02
	IEC 60512-2-1:2002-02
	IEC 60512-3-1:2002-02
	IEC 60512-4-1:2003-05
Requirements, Contact resistance	Resistance difference ΔR ≤ 15 mΩ (for each channel)
Requirements, insulation resistance	R_I ≥ 100 MΩ
Requirements, dielectric strength	There must be no electrical flashovers or disruptive charges for the duration of the test. The maximum permissible leakage current must not be exceeded.
Requirements, visual check	No defects that impair normal functionality.
No. of cycles	5
Dwell time	30 min
Transition duration	≤ 10 s
Minimum temperature	-40 °C
Maximum temperature	+85 °C
Specification	IEC 60512-11-9:2002-02
	IEC 60512-1-1:2002-02
	IEC 60512-3-1:2002-02
Requirements, insulation resistance	R_I ≥ 100 MΩ
Requirements, visual check	No defects that impair normal functionality.
Test duration	16 h
Temperature for testing	85 °C
Specification	IEC 60512-11-12:2002-02
	IEC 60512-1-1:2002-02
Requirements, visual check	No defects that impair normal functionality.
Test duration	24 h
Temperature for testing	40 °C
Specification	IEC 60512-11-10:2002-02
	IEC 60512-1-1:2002-02

Requirements, visual check	No defects that impair normal functionality.
Test duration	2 h
Temperature for testing	-40 °C
Specification	IEC 60512-11-12:2002-02
	IEC 60512-1-1:2002-02
	IEC 60512-2-1:2002-02
	IEC 60512-3-1:2002-02
	IEC 60512-4-1:2003-05
	IEC 60512-13-2:2006-02
Requirements, Contact resistance	Resistance difference ΔR ≤ 15 mΩ (for each channel)
Requirements, insulation resistance	R_I ≥ 100 MΩ
Requirements, dielectric strength	There must be no electrical flashovers or disruptive charges for the duration of the test. The maximum permissible leakage current must not be exceeded.
Requirements, insertion and withdrawal forces	Maximum allowable insertion force $F_{insertion}$ < 10 N Maximum allowable withdrawal force $F_{withdrawal}$ < 15 N
Requirements, visual check	No defects that impair normal functionality.
Test duration	24 h
Temperature for testing	40 °C
Specification	IEC 60512-1-1:2002-02
	IEC 60512-3-1:2002-02
	IEC 60512-4-1:2003-05
Requirements	Water that is sprayed against the housing as a jet from any direction must not have any harmful effect.
Requirements, insulation resistance	R_I ≥ 100 MΩ
Requirements, dielectric strength	There must be no electrical flashovers or disruptive charges for the duration of the test. The maximum permissible leakage current must not be exceeded.
Requirements, visual check	No defects that impair normal functionality.
Test duration	1 min/m² at least 3 min
Additional text	The values specified apply to all repetitions of the same test within the normative test sequence.
Specification	IEC 60512-1-1:2002-02
	IEC 60512-3-1:2002-02
	IEC 60512-4-1:2003-05
Requirements	Water must not penetrate in a harmful quantity when the housing is temporarily submerged in water under standard pressure and time conditions.
Requirements, insulation resistance	R_I ≥ 100 MΩ
Requirements, dielectric strength	There must be no electrical flashovers or disruptive charges for the duration of the test. The maximum permissible leakage current must not be exceeded.
Requirements, visual check	No defects that impair normal functionality.
Test duration	30 min

Additional text	The values specified apply to all repetitions of the same test within the normative test sequence.
Specification	IEC 60512-1-1:2002-02
	IEC 60512-2-1:2002-02
	IEC 60512-3-1:2002-02
	IEC 60512-13-2:2006-02
Requirements	Dust must not enter the housing.
Requirements, Contact resistance	Resistance difference ΔR ≤ 15 mΩ (for each channel)
Requirements, insertion and withdrawal forces	Maximum allowable insertion force $F_{insertion}$ < 10 N Maximum allowable withdrawal force $F_{withdrawal}$ < 15 N
Requirements, visual check	No defects that impair normal functionality.
Test duration	8 h
Additional text	The values specified apply to all repetitions of the same test within the normative test sequence.
Specification	IEC 60512-13-5:2006-02
Requirements	No damage that can impair normal functionality. Connectors must only be able to be plugged in when they are in the correct position and combination. The design must prevent mismatching. Polarization prevents incorrect electrical contact.
Insertion force	1,5 x mating force; at least 35 N
Specification	IEC 60512-9-1:2010-03
	IEC 60512-1-1:2002-02
	IEC 60512-2-1:2002-02
Requirements, Contact resistance	Resistance difference ΔR ≤ 15 mΩ (for each channel)
Requirements, visual check	No defects that impair normal functionality.
No. of cycles	50
Specification	IEC 60512-11-7:2003-05
Requirements	No damage (corrosion) to the metal body that impairs normal functionality.
Requirements, Contact resistance	Resistance difference ΔR ≤ 15 mΩ (for each channel)
Test duration	4 days
Test procedure	Method 4
Specification	IEC 60512-9-1:2010-03
Requirements, Contact resistance	Resistance difference ΔR ≤ 15 mΩ (for each channel)
Requirements, insulation resistance	R_I ≥ 100 MΩ
Requirements, dielectric strength	There must be no electrical flashovers or disruptive charges for the duration of the test. The maximum permissible leakage current must not be exceeded.
Requirements, visual check	No defects that impair normal functionality.
No. of cycles	50
Specification	IEC 60512-11-4:2002-02
	IEC 60512-1-1:2002-02
	IEC 60512-2-1:2002-02
	IEC 60512-3-1:2002-02
	IEC 60512-4-1:2003-05
Requirements, Contact resistance	Resistance difference ΔR ≤ 15 mΩ (for each channel)

Requirements, insulation resistance	$R_I \geq 100\ M\Omega$
Requirements, dielectric strength	There must be no electrical flashovers or disruptive charges for the duration of the test. The maximum permissible leakage current must not be exceeded.
Requirements, visual check	No defects that impair normal functionality.
No. of cycles	5
Dwell time	30 min
Transition duration	≤ 10 s
Minimum temperature	-40 °C
Maximum temperature	+85 °C
Specification	IEC 60512-9-1:2010-03
	IEC 60512-1-1:2002-02
	IEC 60512-2-1:2002-02
Requirements, Contact resistance	Resistance difference ΔR ≤ 15 mΩ (for each channel)
Requirements, visual check	No defects that impair normal functionality.
No. of cycles	100
Requirements	No change in the material properties that would limit the intended use.
Test liquid	IRM 902
Specification	IEC 61373:2010-05
	IEC 60512-1-1:2002-02
	IEC 60512-2-1:2002-02
Contact disturbance requirement	Duration of the disturbance: max. 1 µs
Requirements, Contact resistance	Resistance difference ΔR ≤ 15 mΩ (for each channel)
Requirements, visual check	No defects that impair normal functionality.
Acceleration	30g
Test directions	X-, Y- and Z-axis
Category	2
Pulse shape	Half-sine
Number of shocks per direction	3
Shock duration	18 ms
Specification	IEC 61373:2010-05
	IEC 60512-1-1:2002-02
	IEC 60512-2-1:2002-02
Contact disturbance requirement	Duration of the disturbance: max. 1 µs
Requirements, Contact resistance	Resistance difference ΔR ≤ 15 mΩ (for each channel)
Requirements, visual check	No defects that impair normal functionality.
Lowest frequency	2 Hz
Highest frequency	250 Hz
Test directions	X-, Y- and Z-axis
Category	2

Standards and regulations

Standard designation	M12 connector

Standards/specifications	IEC 61076-2-101

Electrical tests

Specification	IEC 60512-2-1:2002-02
Requirements	Resistance difference ΔR ≤ 15 mΩ (for each channel) R_{max} - R_{wire} ≤ 10 mΩ (for each channel) R_{shield} - $R_{cableshield}$ ≤ 100 mΩ
Additional text	The values specified apply to all repetitions of the same test within the normative test sequence.
Specification	IEC 60512-3-1:2002-02
Requirements, insulation resistance	R_I ≥ 100 MΩ
Additional text	The values specified apply to all repetitions of the same test within the normative test sequence.
Specification	IEC 60512-4-1:2003-05
Requirements, dielectric strength	There must be no electrical flashovers or disruptive charges for the duration of the test. The maximum permissible leakage current must not be exceeded.
Test voltage	1 kV AC
Test duration	60 s
Additional text	The values specified apply to all repetitions of the same test within the normative test sequence.
Specification	IEC 60512-9-2:2011-11
	IEC 60512-1-1:2002-02
	IEC 60512-2-1:2002-02
	IEC 60512-3-1:2002-02
	IEC 60512-4-1:2003-05
Requirements	The sum of the ambient temperature and temperature rise of a connector must not exceed the upper limiting temperature.
Requirements, Contact resistance	Resistance difference ΔR ≤ 15 mΩ (for each channel)
Requirements, insulation resistance	R_I ≥ 100 MΩ
Requirements, dielectric strength	There must be no electrical flashovers or disruptive charges for the duration of the test. The maximum permissible leakage current must not be exceeded.
Requirements, visual check	No defects that impair normal functionality.
Test current	4 A
Test duration	1000 h
Temperature for testing	40 °C
Upper limiting temperature	85 °C
Specification	IEC 60352-2:2006-02
Connection method	Crimp connections

Mechanical tests

Specification	IEC 60512-1-1:2002-02
Requirements, visual check	No defects that impair normal functionality.
Additional text	The values specified apply to all repetitions of the same test within the normative test sequence.

Dimensional examination

Specification	IEC 60512-1-2:2002-02
Requirements	All individual parts have been approved for the current revision status.
Specification	IEC 60512-13-2:2006-02
Requirements, insertion and withdrawal forces	Maximum allowable insertion force $F_{insertion}$ < 10 N Maximum allowable withdrawal force $F_{withdrawal}$ < 15 N
Additional text	The values specified apply to all repetitions of the same test within the normative test sequence.
Specification	IEC 60512-16-5:2008-07
Requirements	After 3 matings with the maximum gauge, the tested contacts must still be able to hold the minimum gauge.
Additional text	The values specified apply to all repetitions of the same test within the normative test sequence.
Specification	IEC 60512-7-1:2010-03
	IEC 60512-1-1:2002-02
Requirements, visual check	Loose parts or damage that would impair functionality are not permitted.

Drawings

Dimensional drawing

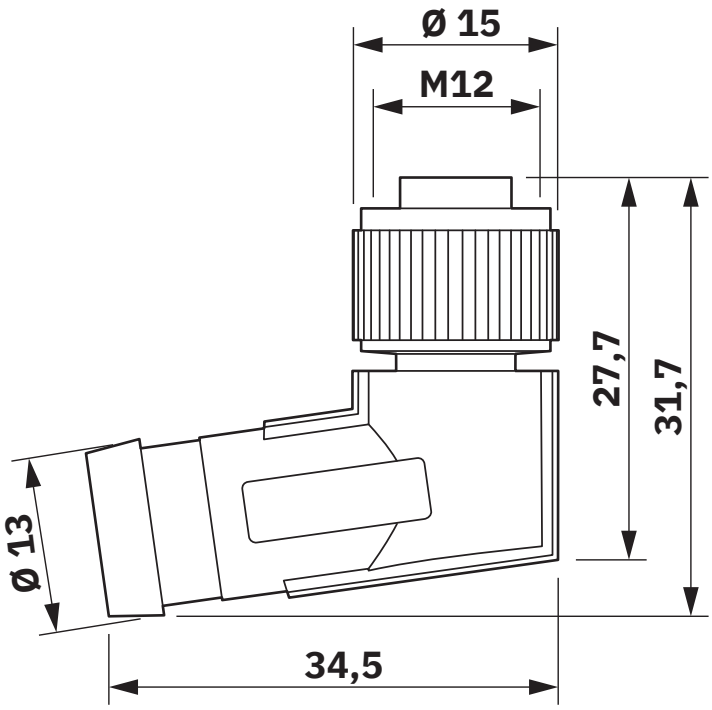

M12 x 1 socket, angled, shielded

Schematic diagram

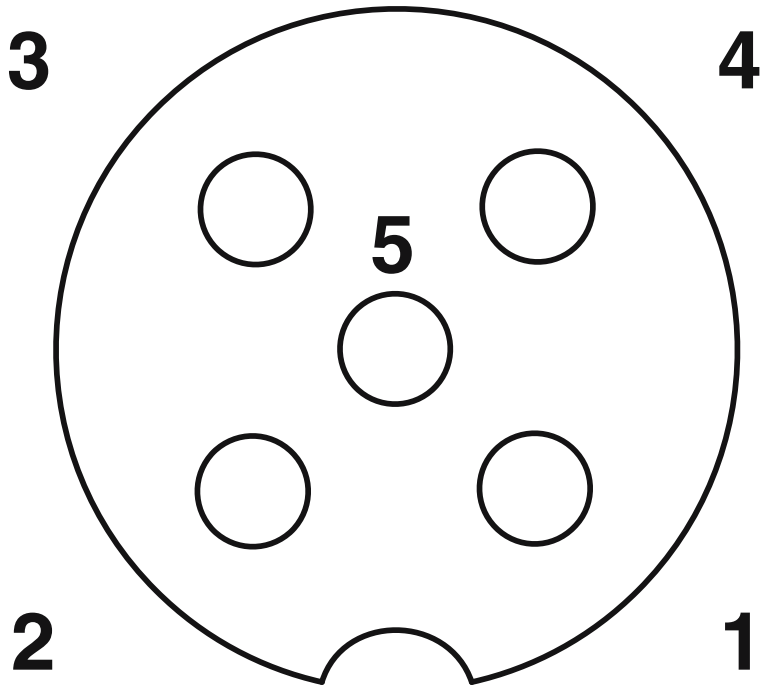

Pin assignment M12 socket, 5-pos., A-coded, socket side view

Circuit diagram

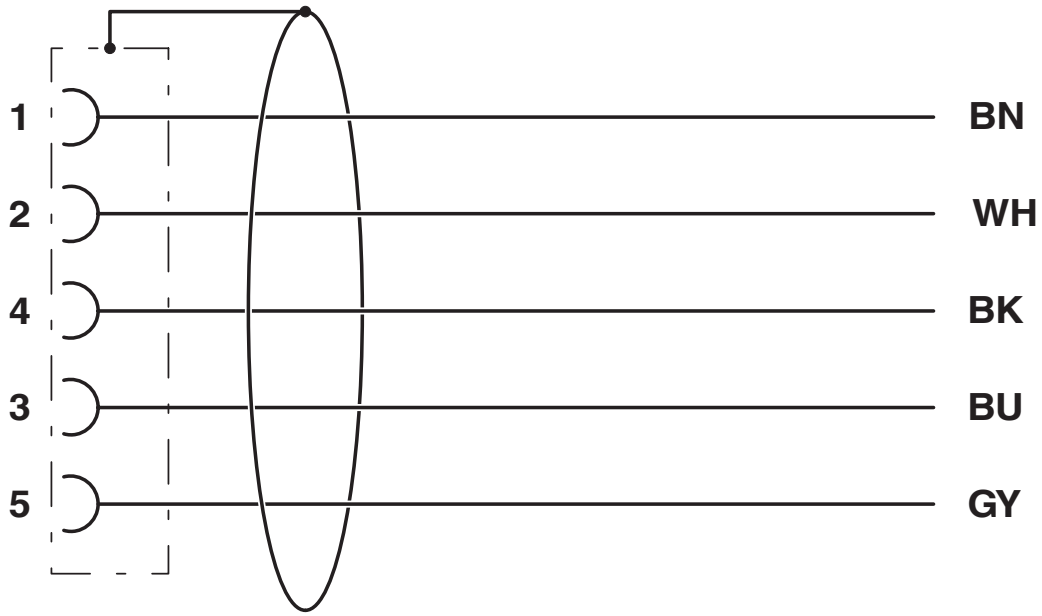

Contact assignment of the M12 socket

Approvals

To download certificates, visit the product detail page: https://www.phoenixcontact.com/us/products/1682980

UL Listed
Approval ID: FILE E 221474

	Nominal voltage U_N	Nominal current I_N	Cross section AWG	Cross section mm^2
keine				
	125 V	4 A	-	-

cUL Listed
Approval ID: FILE E 221474

	Nominal voltage U_N	Nominal current I_N	Cross section AWG	Cross section mm^2
keine				
	125 V	4 A	-	-

EAC-RoHS
Approval ID: RU D-DE.HB35.B.00387

Classifications

ECLASS

ECLASS-13.0	27060311
ECLASS-15.0	27060311

ETIM

ETIM 10.0	EC001855

UNSPSC

UNSPSC 21.0	26121600

Environmental product compliance

EU RoHS

Fulfills EU RoHS substance requirements	Yes, No exemptions

China RoHS

Environment friendly use period (EFUP)	EFUP-E
	No hazardous substances above the limits

EU REACH SVHC

REACH candidate substance (CAS No.)	No substance above 0.1 wt%

EF3.1 Climate Change

CO2e kg	4.548 kg CO2e

Phoenix Contact 2026 © - all rights reserved
https://www.phoenixcontact.com

Phoenix Contact USA
586 Fulling Mill Road
Middletown, PA 17057, United States
(+717) 944-1300
info@phoenixcon.com