VS-SI-SD-DE - Socket insert

1656505

https://www.phoenixcontact.com/us/products/1656505

Please be informed that the data shown in this PDF document is generated from our online catalog. Please find the complete data in the user documentation. Our general terms of use for downloads are valid.



Ground contact socket, plastic, for Germany

Commercial data

Item number	1656505
Packing unit	1 pc
Minimum order quantity	1 pc
Sales key	BF70
Product key	AF7EBX
GTIN	4046356029872
Weight per piece (including packing)	154 g
Weight per piece (excluding packing)	144.8 g
Customs tariff number	85366990
Country of origin	BE

Technical data

Notes

General	with yellow LED display

Product properties

Product type	Socket
Country ID	Germany

Electrical properties

Rated voltage (III/3)	250 V
Rated current	16 A

Connection data

Connection method	Screw connection

Dimensions

Dimensional drawing	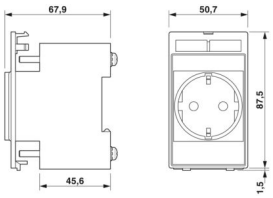
Width	50.7 mm
Height	87.5 mm
Depth	67.9 mm

Material specifications

Material Housing	PA
Flammability rating according to UL 94	V0

Environmental and real-life conditions

Ambient conditions

Degree of protection	IP20
Ambient temperature (operation)	-10 °C ... 60 °C

Mounting

Assembly note	suitable for all mounting frames

Drawings

Dimensional drawing

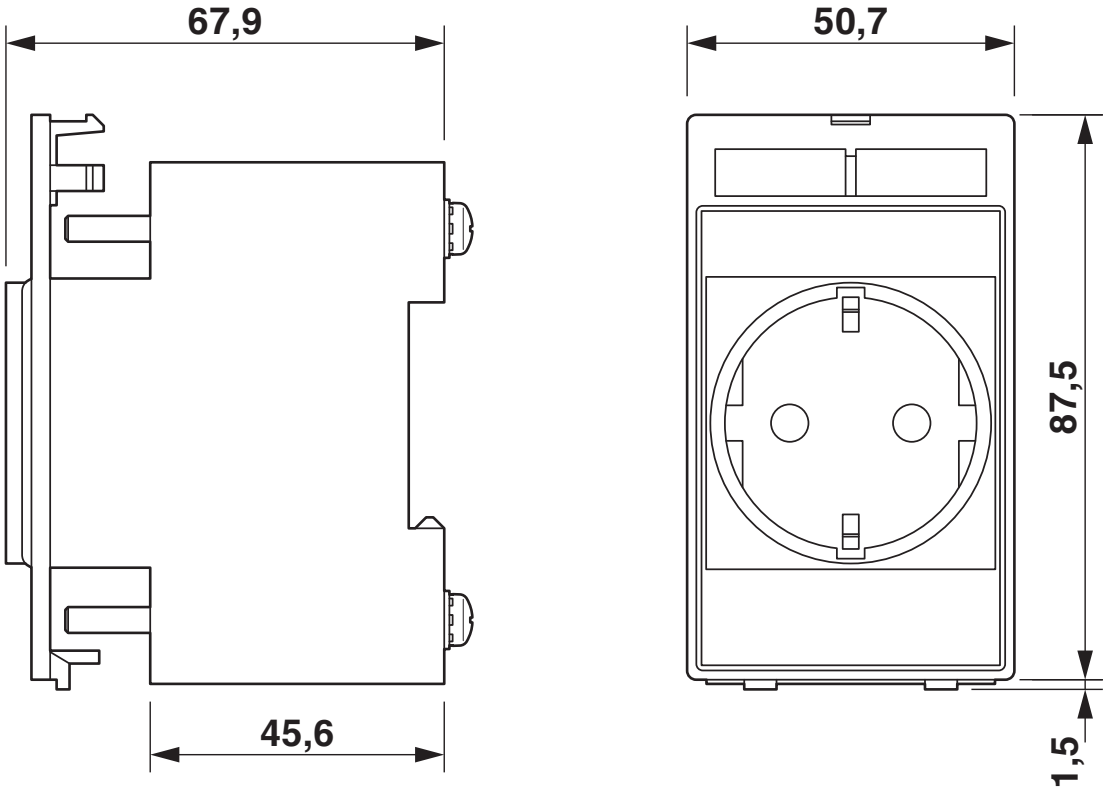

Socket insert

Classifications

ECLASS

ECLASS-15.0	27144021
ECLASS-13.0	27144021

ETIM

ETIM 10.0	EC000450

UNSPSC

UNSPSC 21.0	39121400

Environmental product compliance

EU RoHS

Fulfills EU RoHS substance requirements	Yes, No exemptions

China RoHS

Environment friendly use period (EFUP)	EFUP-50
	An article-related China RoHS declaration table can be found in the download area for the respective article under "Manufacturer declaration". For all articles with EFUP-E, no China RoHS declaration table issued and required.

EU REACH SVHC

REACH candidate substance (CAS No.)	No substance above 0.1 wt%

EF3.1 Climate Change

CO2e kg	2.975 kg CO2e

Phoenix Contact 2026 © - all rights reserved
https://www.phoenixcontact.com

Phoenix Contact USA
586 Fulling Mill Road
Middletown, PA 17057, United States
(+717) 944-1300
info@phoenixcon.com