VS-SI-EB-EMV-1 - Mounting frame

1656482

https://www.phoenixcontact.com/us/products/1656482

Please be informed that the data shown in this PDF document is generated from our online catalog. Please find the complete data in the user documentation. Our general terms of use for downloads are valid.



Mounting frame, for one front plate or socket, metal frame, matt nickel-plated, electrically conductive, transparent cover

Commercial data

Item number	1656482
Packing unit	1 pc
Minimum order quantity	1 pc
Sales key	BF70
Product key	AF7EAX
GTIN	4046356029858
Weight per piece (including packing)	206 g
Weight per piece (excluding packing)	204.1 g
Customs tariff number	85389099
Country of origin	DE

Technical data

Notes

General	With lockable pressure lock

Product properties

Product type	Mounting frame

Dimensions

Dimensional drawing	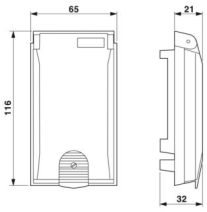
Width	65 mm
Height	38 mm
Length	120 mm

Installation dimensions

Width of the assembly cutout	52 mm
Length of the assembly cutout	91 mm

Material specifications

Material Housing	Zinc alloy (nickel-plated)
Flammability rating according to UL 94	V0

Environmental and real-life conditions

Ambient conditions

Degree of protection	IP65
Ambient temperature (operation)	-10 °C ... 60 °C
Ambient temperature (storage/transport)	-25 °C ... 70 °C

Mounting

Assembly note	Suitable for panel thicknesses 1 mm ... 5 mm
	When combining the 1656482 mounting frame and the 1054542, 1054543, 1054544 front panels, the lower PE pin on the mounting frame must be removed. The pin can be bent and removed with pliers.

Drawings

Dimensional drawing

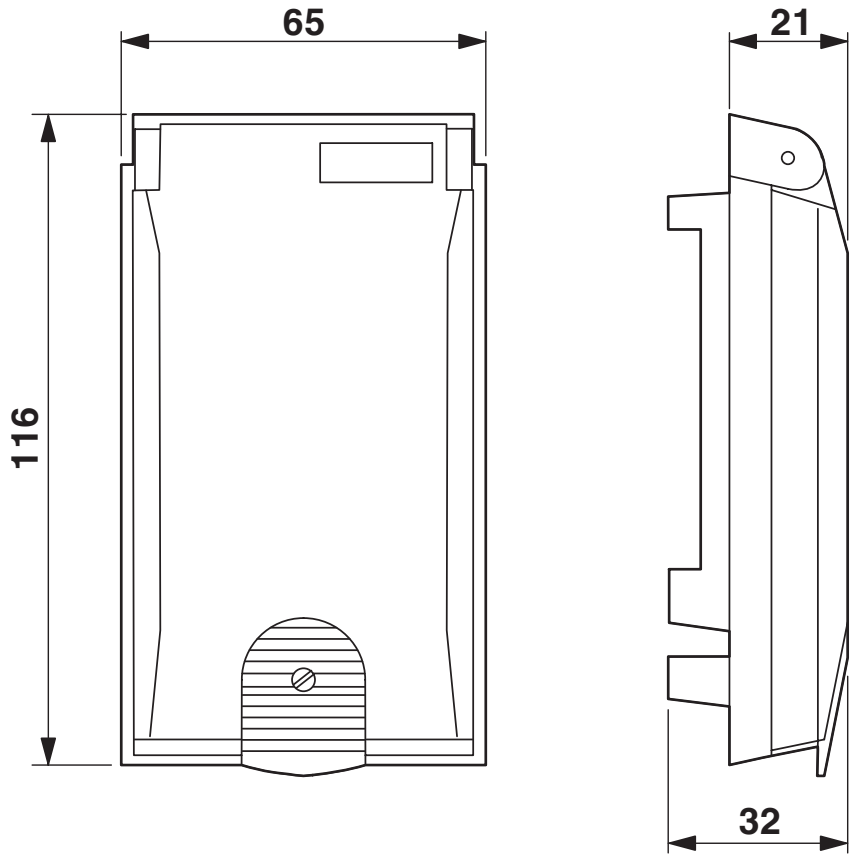

Dimensional drawing

Dimensional drawing

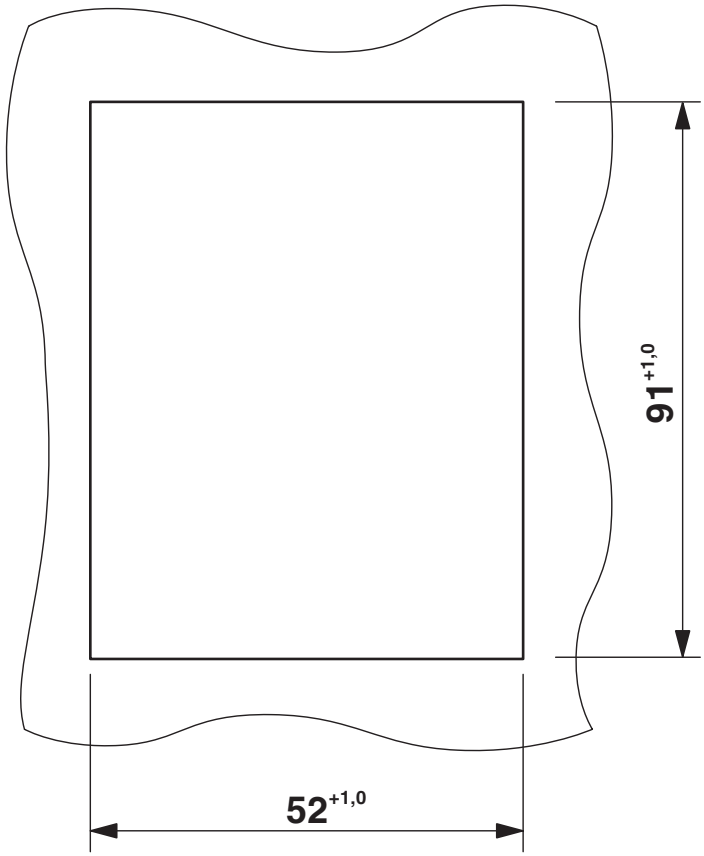

Mounting cutout

Classifications

ECLASS

ECLASS-13.0	27182806
ECLASS-15.0	27182806

ETIM

ETIM 10.0	EC000456

UNSPSC

UNSPSC 21.0	31261500

Environmental product compliance

EU RoHS

Fulfills EU RoHS substance requirements	Yes
Exemption	6(c)

China RoHS

Environment friendly use period (EFUP)	EFUP-50
	An article-related China RoHS declaration table can be found in the download area for the respective article under "Manufacturer declaration". For all articles with EFUP-E, no China RoHS declaration table issued and required.

EU REACH SVHC

REACH candidate substance (CAS No.)	Lead(CAS: 7439-92-1)
SCIP	ed8e8539-7aa2-4826-b1ac-956dccac54d6

EF3.1 Climate Change

CO2e kg	2.756 kg CO2e

Phoenix Contact 2026 © - all rights reserved
https://www.phoenixcontact.com

Phoenix Contact USA
586 Fulling Mill Road
Middletown, PA 17057, United States
(+717) 944-1300
info@phoenixcon.com