HC-B 6-A-DT-PER-F - Terminal adapter

1648377

https://www.phoenixcontact.com/us/products/1648377

Please be informed that the data shown in this PDF document is generated from our online catalog. Please find the complete data in the user documentation. Our general terms of use for downloads are valid.



HEAVYCON terminal adapter socket insert, B6 series, 6-pos., for the right side of the control cabinet, push-in connection

Your advantages

- Easy installation without tools, even when mounted, with push-in connection technology
- Shortest installation time compared to other connection technologies
- Quick and effortless wiring, in particular when space is tight
- Automatic cabling with robots possible
- Safe wiring and operation with color-coded actuators
- Shock and vibration-resistant in accordance with DIN EN 61373

Commercial data

Item number	1648377
Packing unit	5 pc
Minimum order quantity	5 pc
Sales key	BF61
Product key	AF7ADC
GTIN	4046356092098
Weight per piece (including packing)	73.86 g
Weight per piece (excluding packing)	73.35 g
Customs tariff number	85366990
Country of origin	CN

Technical data

Notes

General	For HEAVYCON-ADVANCE mounting flange and HEAVYCON panel mounting base of B6 type
General	Connectors may be operated only when there is no load/voltage.

Product properties

Product type	Terminal adapter
Product family	HC-B
Series	HC-B
Type	B6
Number of positions	6
Connection profile	6+PE
Contact numbering	1 - 6

Insulation characteristics

Overvoltage category	III
Degree of pollution	3

Electrical properties

Rated voltage (III/3)	500 V
Rated surge voltage	6 kV
Rated current	16 A
SCCR	5 kA (UL 2237)

Connection data

Connection technology

Connection technology	Push-in connection

Conductor connection

Conductor cross-section	0.5 mm² ... 2.5 mm²
Connection cross section AWG	20 ... 12
Stripping length of the individual wire	10 mm (13 mm with ferrule)

Dimensions

Dimensional drawing	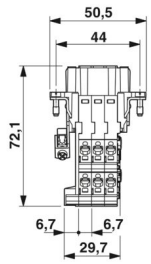

Width	34 mm
Height	72.1 mm
Length	50.5 mm
Drill hole distance, horizontal	44 mm
Drill hole distance, vertical	27 mm

Material specifications

Flammability rating according to UL 94	V0
Contact material	Copper alloy
Contact surface material	Ag
Contact carrier material	PA

Mechanical properties

Mechanical data

Insertion/withdrawal cycles	≥ 500

Environmental and real-life conditions

Ambient conditions

Degree of protection	IP20
Ambient temperature (operation)	-40 °C ... 125 °C

Standards and regulations

Constructional and testing regulations	DIN EN 61984
	DIN EN 60664
	IEC 60352
Tests	DIN EN 61984
	DIN EN 60664
	IEC 60352
Standards/regulations	PA: Fire protection in rail vehicles - requirement sets R22, R23, and R24 acc. to DIN EN 45545-2 (Risk level HL1 - HL3)

Mounting

Assembly note	To ensure correct use, installation in housing with IP54 protection or better is required
	Connectors may be plugged in only when there is no load/voltage.

Drawings

Dimensional drawing

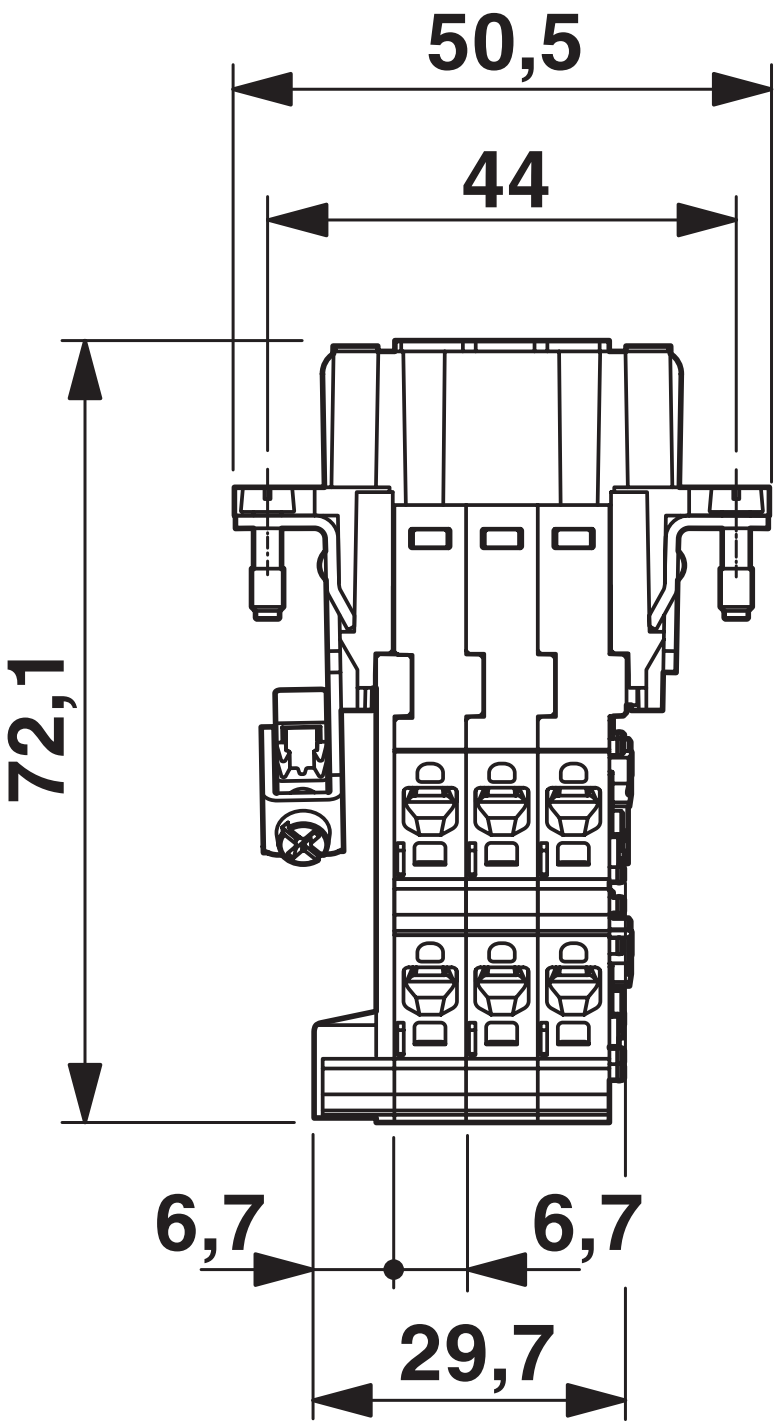

Dimensional drawing

Dimensional drawing

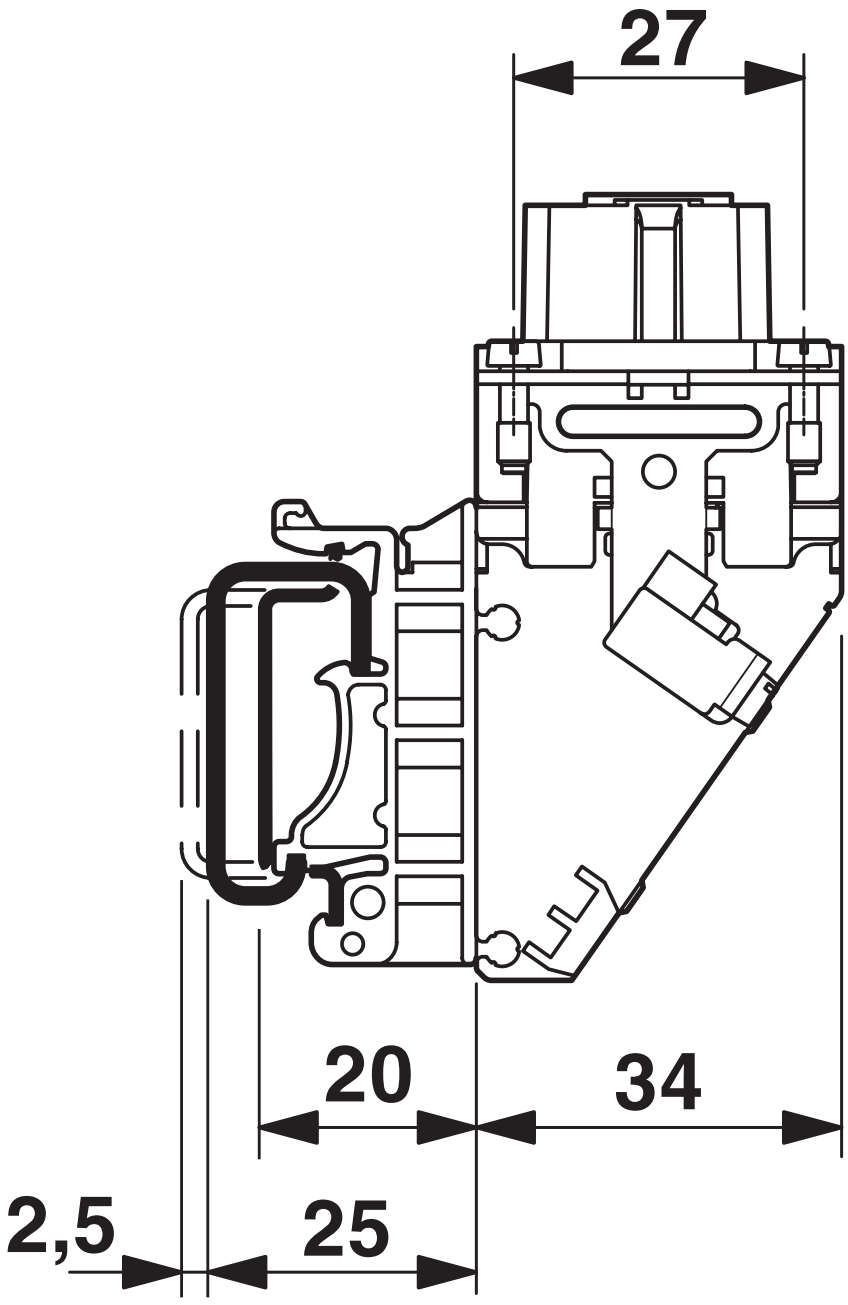

Dimensional drawing, side view

Application drawing

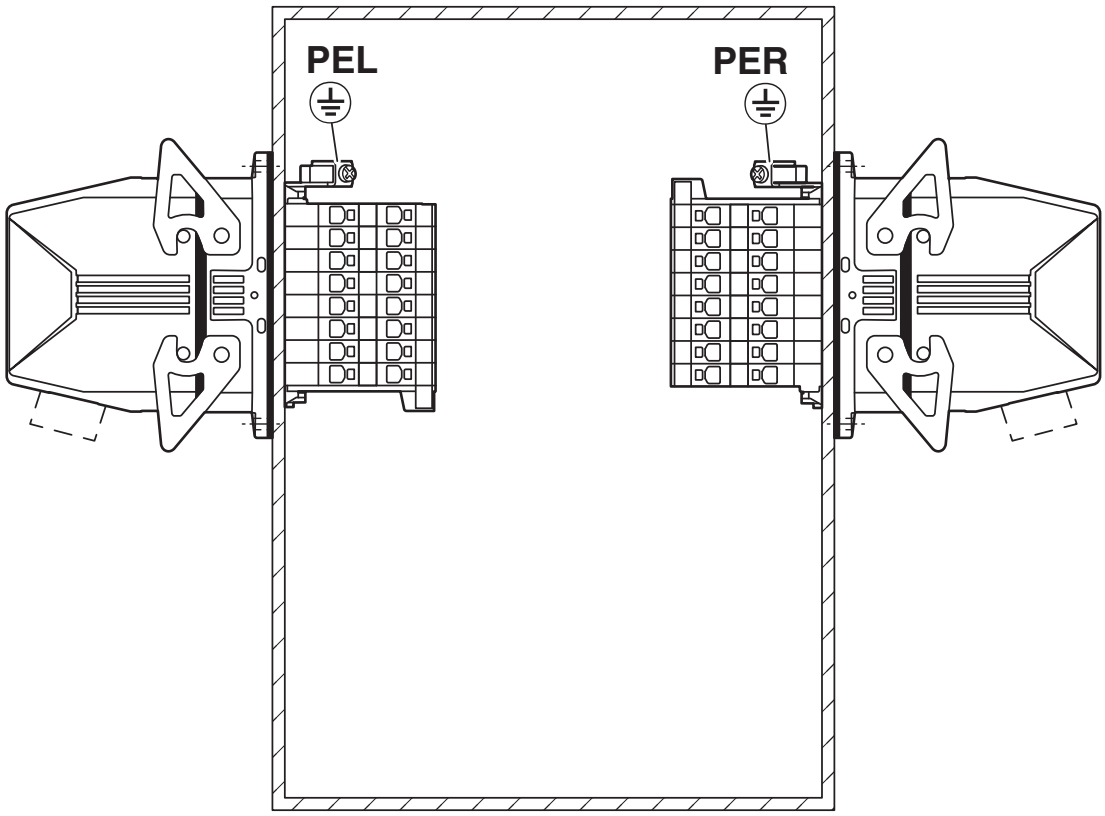

Mounting position PE connection left/right (PEL/PER)

Schematic diagram

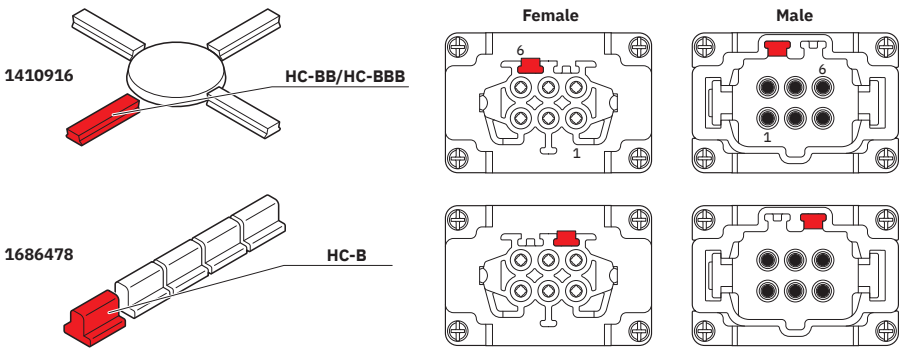

Coding options

Diagram

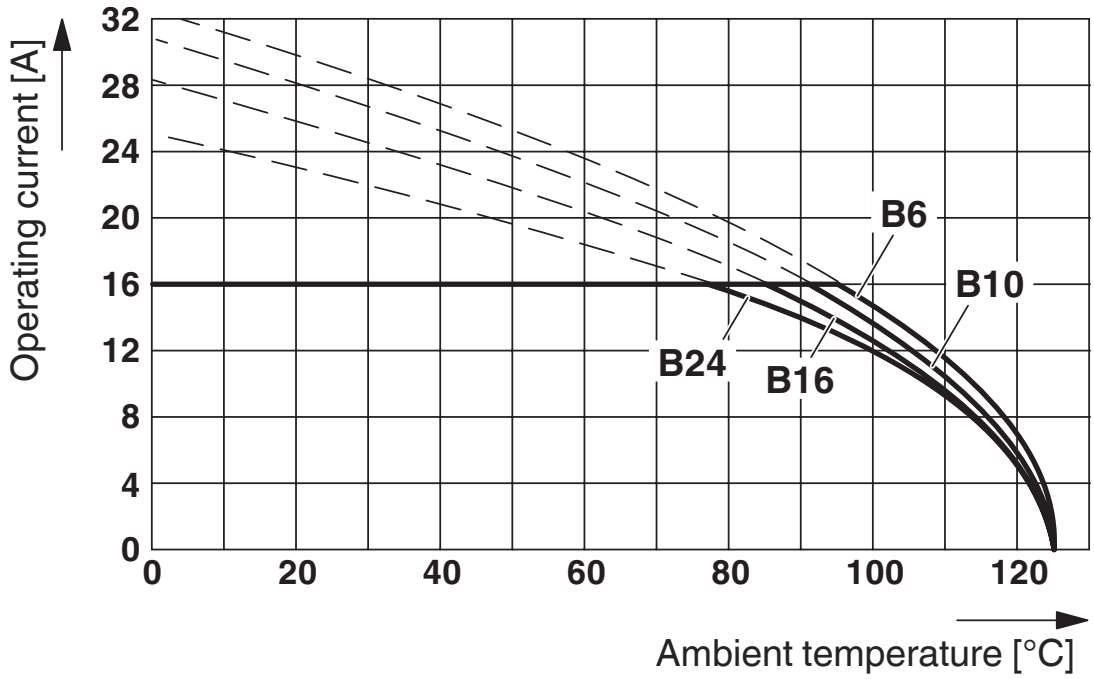

Derating diagram,
conductor cross-section: 2.5 mm^2

Approvals

To download certificates, visit the product detail page: https://www.phoenixcontact.com/us/products/1648377

CSA
Approval ID: 013631_6233_01

	Nominal voltage U_N	Nominal current I_N	Cross section AWG	Cross section mm^2
keine				
	600 V	13 A	22 - 14	-

cUL Recognized
Approval ID: E118976

	Nominal voltage U_N	Nominal current I_N	Cross section AWG	Cross section mm^2
keine				
	600 V	13 A	22 - 14	-

UL Recognized
Approval ID: E118976

	Nominal voltage U_N	Nominal current I_N	Cross section AWG	Cross section mm^2
keine				
	600 V	13 A	22 - 14	-

cULus Recognized
Approval ID: E468743

	Nominal voltage U_N	Nominal current I_N	Cross section AWG	Cross section mm^2
keine				
	600 V	13 A	- 14	-

Classifications

ECLASS

ECLASS-13.0	27440222
ECLASS-15.0	27440222

ETIM

ETIM 10.0	EC000438

UNSPSC

UNSPSC 21.0	39121500

Environmental product compliance

EU RoHS

Fulfills EU RoHS substance requirements	Yes, No exemptions

China RoHS

Environment friendly use period (EFUP)	EFUP-E
	No hazardous substances above the limits

EU REACH SVHC

REACH candidate substance (CAS No.)	No substance above 0.1 wt%

Phoenix Contact 2026 © - all rights reserved
https://www.phoenixcontact.com

Phoenix Contact USA
586 Fulling Mill Road
Middletown, PA 17057, United States
(+717) 944-1300
info@phoenixcon.com