HC-M-KV-M20(11-16) - Cable gland

1645998

https://www.phoenixcontact.com/us/products/1645998

Please be informed that the data shown in this PDF document is generated from our online catalog. Please find the complete data in the user documentation. Our general terms of use for downloads are valid.



Metal screw connection up to 5 bar, thread length: 6 mm, cable diameter: 11 - 16 mm, WAF 27, screw connection: M20

Commercial data

Item number	1645998
Packing unit	25 pc
Minimum order quantity	1 pc
Sales key	BF68
Product key	AF7DAX
GTIN	4017918941260
Weight per piece (including packing)	45.72 g
Weight per piece (excluding packing)	45.51 g
Customs tariff number	74198090
Country of origin	DE

Technical data

Product properties

Product type	Cable screw gland
Application	Standard
No. of conductors	1
Manufacturer	Jacob
Manufacturer Designation	50.620/25 M
Shielded	no

Dimensions

Dimensional drawing	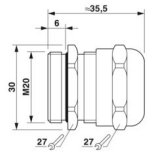
Length	35.5 mm
Length of the connecting thread	6 mm
Hole diameter	20.1 mm ... 20.2 mm
Wrench size, union nut	27 mm
Wrench size, support	27 mm
Hexagon angular dimension	30 mm
Thread type connection side	M20 x 1.5
Thread pitch	1.5 mm

Connection data

Tightening torque	7.5 Nm (Union nut)
	7.5 Nm (Support sleeve)

Material specifications

Material Compression ring	PA
Seal material	NBR (O-ring)
	CR/NBR
Material for screw connection	Brass, nickel-plated

Cable/line

External cable diameter Cable 1	11 mm ... 16 mm
Halogen-free	no

Environmental and real-life conditions

Ambient conditions

Degree of protection	IP68 (up to 5 bar)
Ambient temperature (operation)	-30 °C ... 100 °C

Drawings

Dimensional drawing

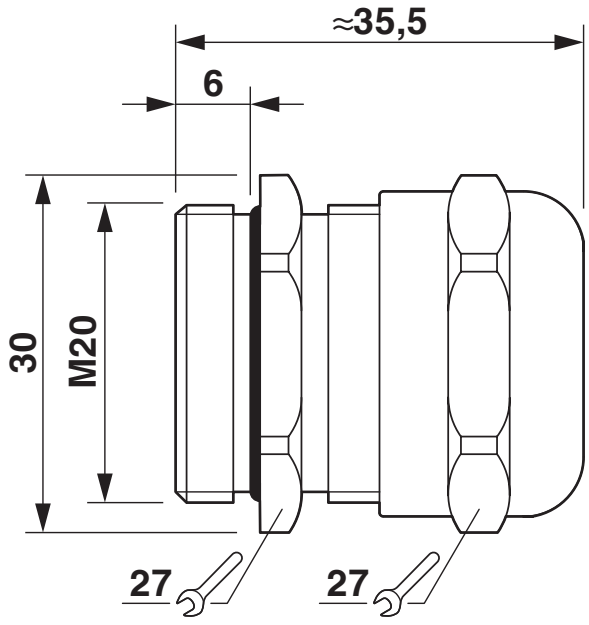

Dimensional drawing

Classifications

ECLASS

ECLASS-13.0	27140801
ECLASS-15.0	27140801

ETIM

ETIM 10.0	EC000441

UNSPSC

UNSPSC 21.0	39121300

Environmental product compliance

EU RoHS

Fulfills EU RoHS substance requirements	Yes
Exemption	6(c)

China RoHS

Environment friendly use period (EFUP)	EFUP-50
	An article-related China RoHS declaration table can be found in the download area for the respective article under "Manufacturer declaration". For all articles with EFUP-E, no China RoHS declaration table issued and required.

EU REACH SVHC

REACH candidate substance (CAS No.)	Lead(CAS: 7439-92-1)
SCIP	b4f45b5a-e88d-4bc0-87dc-337c28da4a9f

EF3.1 Climate Change

CO2e kg	0.601 kg CO2e

Phoenix Contact 2026 © - all rights reserved
https://www.phoenixcontact.com

Phoenix Contact USA
586 Fulling Mill Road
Middletown, PA 17057, United States
(+717) 944-1300
info@phoenixcon.com