HC-A3-BUQ1,5-KML-G-PA - Connector

1641617

https://www.phoenixcontact.com/us/products/1641617

Please be informed that the data shown in this PDF document is generated from our online catalog. Please find the complete data in the user documentation. Our general terms of use for downloads are valid.



HEAVYCON QUICKON coupling housing A3, with single locking latch, 3-pos., with PE connection, socket, QUICKON connection, straight cable outlet

Commercial data

Item number	1641617
Packing unit	1 pc
Minimum order quantity	1 pc
Sales key	BF63
Product key	AF7AJX
GTIN	4017918899370
Weight per piece (including packing)	35.7 g
Weight per piece (excluding packing)	35 g
Customs tariff number	85366990
Country of origin	PL

Technical data

Product properties

Product type	Connector set
Housing type	Complete housing
Series	HC-A
Application	Standard
Type	D7
Number of positions	3
Connection profile	3+PE
Contact numbering	1 - 3
No. of cable outlets	1
Shielded	no
Cable outlet	straight

Insulation characteristics

Overvoltage category	III
Degree of pollution	3

Electrical properties

Rated voltage (III/3)	400 V
Rated surge voltage (II/2)	4 kV
Rated surge voltage (III/2)	4 kV
Rated surge voltage (III/3)	4 kV
Rated current	10 A
Nominal voltage U_N	400 V
Nominal current I_N	10 A

Connection data

Connection method	IDC connection
Connection technology	IDC connection
Conductor cross-section	0.75 mm² ... 1.5 mm²
	0.75 mm² ... 1.5 mm²
Connection cross section AWG	18 ... 16
Tightening torque	3 Nm

Dimensions

Dimensional drawing	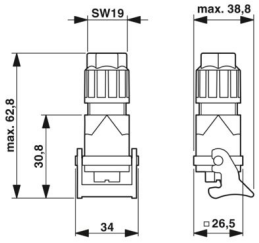
Width	34 mm
Height	62.8 mm
Length	26.5 mm

Material specifications

Material Housing	PA
Flammability rating according to UL 94	V0
Contact material	Copper alloy
Contact surface material	Ag
Contact carrier material	PA/PC

Cable/line

Structure of individual litz in acc. with VDE 0295 / smallest wire diameter	VDE 0295 Cl.2-5, min. wire diameter 0.2 mm
External cable diameter	6 mm ... 12 mm
Wire diameter including insulation	1.8 mm ... 3 mm

Mechanical properties

Mechanical data

Insertion/withdrawal cycles	>= 500

Environmental and real-life conditions

Ambient conditions

Degree of protection	IP65
Ambient temperature (operation)	-25 °C ... 80 °C
Temperature when conductor connected	-5 °C ... 50 °C (specifications of the cable manufacturer must also be observed)
Ambient temperature (storage/transport)	-25 °C ... 80 °C

Mounting

Assembly note	This product is only intended for use outdoors.
	If the conductor is reconnected, it must be cut off above the last contact point. QUICKON components may only be operated when under no load.

Drawings

Dimensional drawing

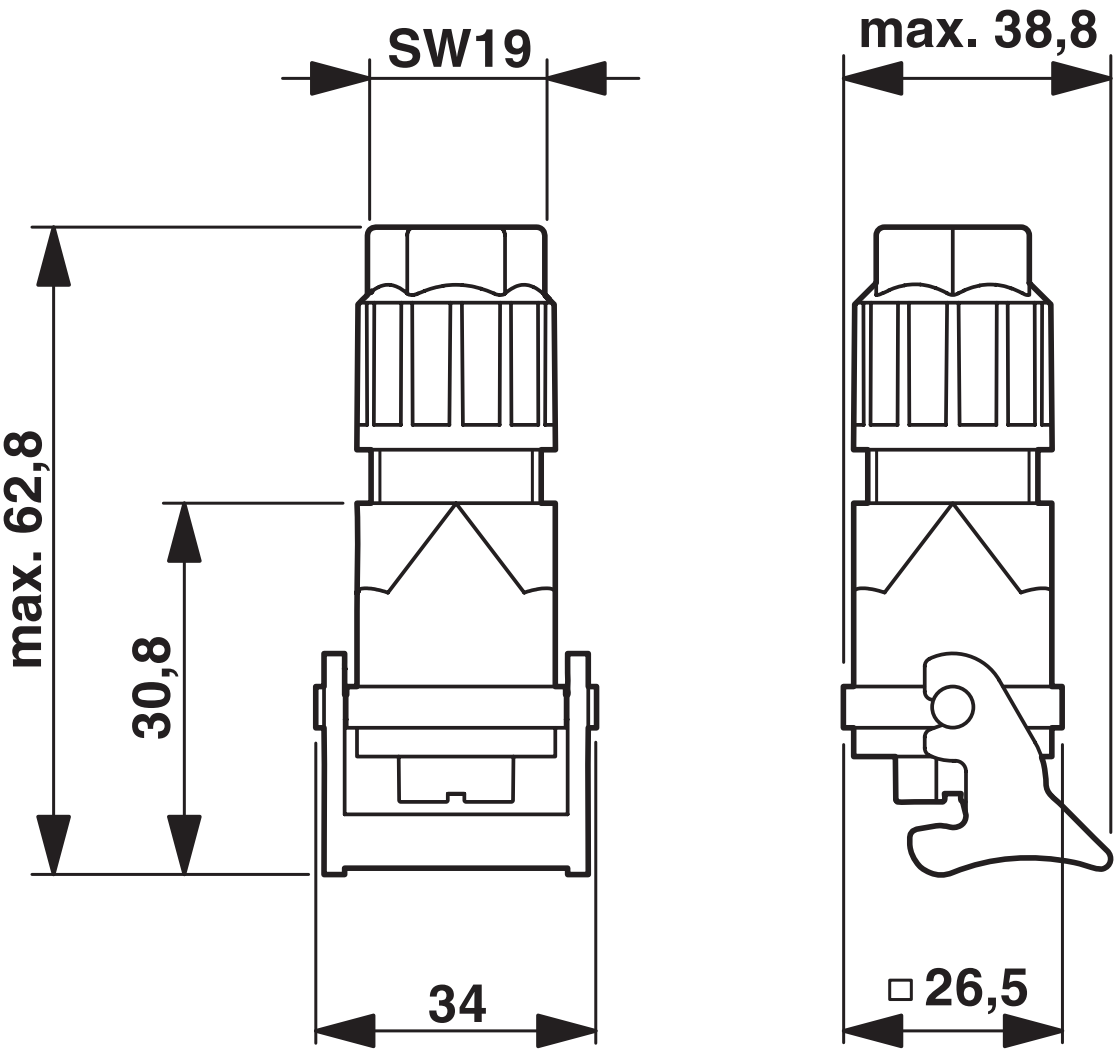

Dimensional drawing

Diagram

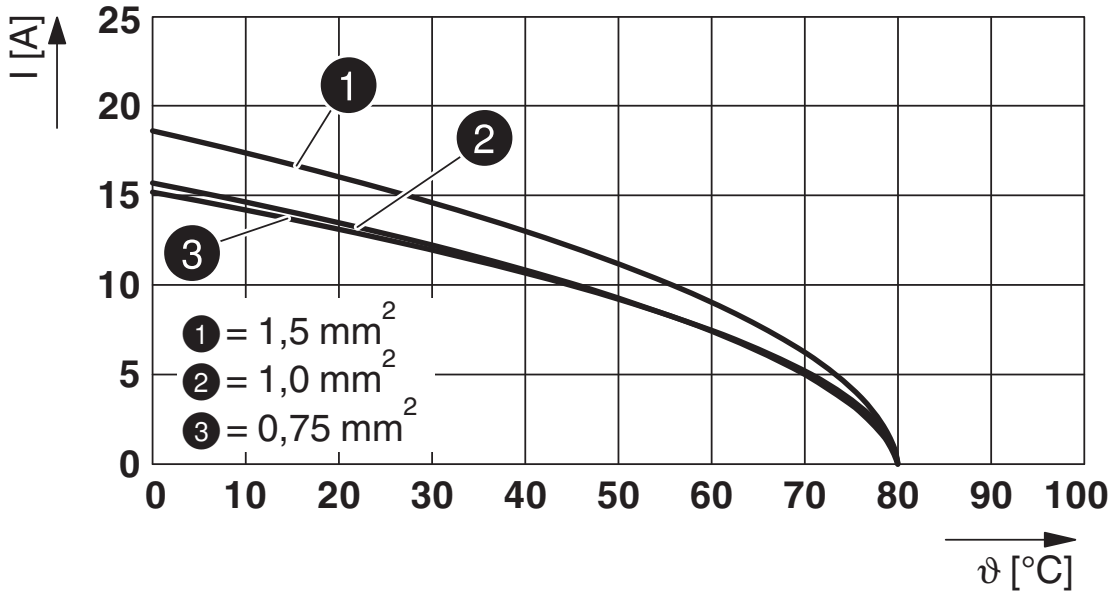

Derating diagram

Approvals

To download certificates, visit the product detail page: https://www.phoenixcontact.com/us/products/1641617

DNV
Approval ID: TAE000037S

cUL Recognized
Approval ID: E118976

	Nominal voltage U_N	Nominal current I_N	Cross section AWG	Cross section mm^2
keine				
	600 V	10 A	18 - 16	-

UL Recognized
Approval ID: E118976

	Nominal voltage U_N	Nominal current I_N	Cross section AWG	Cross section mm^2
keine				
	600 V	10 A	18 - 16	-

EAC
Approval ID: RU C-DE.AI30.B.01102

Classifications

ECLASS

ECLASS-13.0	27440113
ECLASS-15.0	27440113

ETIM

ETIM 10.0	EC002636

UNSPSC

UNSPSC 21.0	39121400

Environmental product compliance

EU RoHS

Fulfills EU RoHS substance requirements	Yes, No exemptions

China RoHS

Environment friendly use period (EFUP)	EFUP-E
	No hazardous substances above the limits

EU REACH SVHC

REACH candidate substance (CAS No.)	No substance above 0.1 wt%

EF3.1 Climate Change

CO2e kg	0.397 kg CO2e

Phoenix Contact 2026 © - all rights reserved
https://www.phoenixcontact.com

Phoenix Contact USA
586 Fulling Mill Road
Middletown, PA 17057, United States
(+717) 944-1300
info@phoenixcon.com