# HC-K 6/36-EBUC - Contact insert

1636389

https://www.phoenixcontact.com/us/products/1636389

Please be informed that the data shown in this PDF document is generated from our online catalog. Please find the complete data in the user documentation. Our general terms of use for downloads are valid.



Contact insert, number of positions: 6+36+PE, size: B16, power contacts: 6, control contacts: 36, Socket, Crimp connection, 690 V, 40 A, 1.5 $mm^2$ ... 6 $mm^2$, application: Power/signal

## Your advantages

- Shock and vibration-resistant in accordance with DIN EN 61373

## Commercial data

| | |
|---|---|
| Item number | 1636389 |
| Packing unit | 1 pc |
| Minimum order quantity | 1 pc |
| Sales key | BF61 |
| Product key | AF7ABA |
| GTIN | 4046356011525 |
| Weight per piece (including packing) | 78.8 g |
| Weight per piece (excluding packing) | 74 g |
| Customs tariff number | 85366990 |
| Country of origin | CN |

## Technical data

### Notes

| | |
|---|---|
| General | For HEAVYCON ADVANCE and HEAVYCON housing of type B16/B32, power contacts: CK 4,0-ED, control contacts: CK 1,6-ED (crimp contacts not supplied as standard) |
| General | Connectors may be operated only when there is no load/voltage. |

### Mounting

| | |
|---|---|
| Assembly note | To ensure correct use, installation in housing with IP54 protection or better is required |

### Product properties

| | |
|---|---|
| Product type | Contact insert with a fixed no. of positions |
| Series | HC-K |
| Application | Power/signal |
| Type | B16 |
| | B32 |
| Number of positions | 42 |
| Connection profile | 6+36+PE |
| Contact numbering | 1 - 6 (power contacts) |
| | 1 - 36 (control contacts) |
| No. of power contacts | 6 |
| No. of control contacts | 36 |
| Contact material type | turned |

Insulation characteristics

| | |
|---|---|
| Overvoltage category | III |
| Degree of pollution | 3 |

### Dimensions

| | |
|---|---|
| Dimensional drawing | 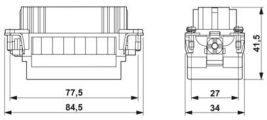 |
| Width | 34 mm |
| Height | 41.5 mm |
| Length | 84.5 mm |
| Drill hole distance, horizontal | 77.5 mm |

Mechanical characteristics

| | |
|---|---|
| Contact diameter | 4 mm |

### Connection data

Connection technology

| | |
|---|---|
| Connection technology | Crimp connection (power contacts) |
| | Crimp connection (control contacts) |

Conductor connection

| | |
|---|---|
| Conductor cross-section | 1.5 mm² ... 6 mm² (power contacts) |
| | 0.14 mm² ... 2.5 mm² (control contacts) |
| Connection cross section AWG | 16 ... 10 (power contacts) |
| | 26 ... 14 (control contacts) |
| Tightening torque | 0.8 Nm ... 1.2 Nm (PE connection) |
| | 0.5 Nm ... 0.8 Nm (Mounting screws for mounting in the HEAVYCON housing) |
| Stripping length of the individual wire | 9 mm (Power 1.5 mm² ... 2.5 mm²) |
| | 8 mm (0.14 mm² ... 1.5 mm²) |
| | 9.5 mm (Power 4 ... 6 mm²) |
| | 6 mm (2.5 mm²) |

## Electrical properties

| | |
|---|---|
| Rated voltage (III/3) | 690 V (power contacts) |
| | 160 V (control contacts) |
| Rated surge voltage | 8 kV (power contacts) |
| | 2.5 kV (control contacts) |
| Rated current | 40 A (power contacts) |
| | 10 A (control contacts) |

## Mechanical properties

Mechanical data

| | |
|---|---|
| Insertion/withdrawal cycles | ≥ 500 |

## Material specifications

| | |
|---|---|
| Flammability rating according to UL 94 | V0 |
| Contact material | Cu alloy |
| Contact carrier material | PC |
| Material of contact surface, power contact | Ag |
| Material of contact surface, control contact | Ag (alternatively Au) |

## Environmental and real-life conditions

Ambient conditions

| | |
|---|---|
| Ambient temperature (operation) (Operation) | -40 °C ... 125 °C |

## Standards and regulations

| | |
|---|---|
| Standards/regulations | PC: Fire protection in rail vehicles - requirement set R22 acc. to DIN EN 45545-2 (Risk level HL1 - HL2) |

| | |
|---|---|
| | PC: Fire protection in rail vehicles - requirement set R23 acc. to DIN EN 45545-2 (Risk level HL1 - HL3) |

## Drawings

Dimensional drawing

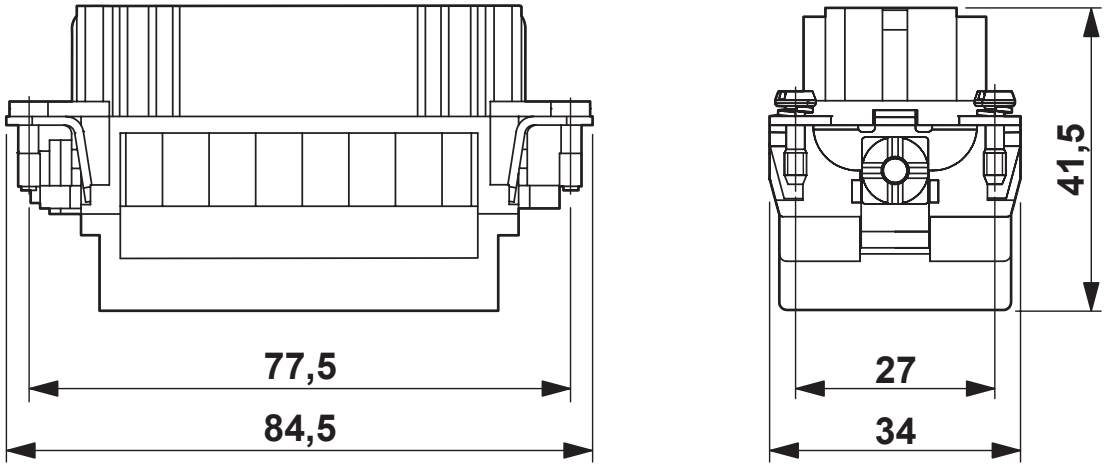


Dimensional drawing

Dimensional drawing

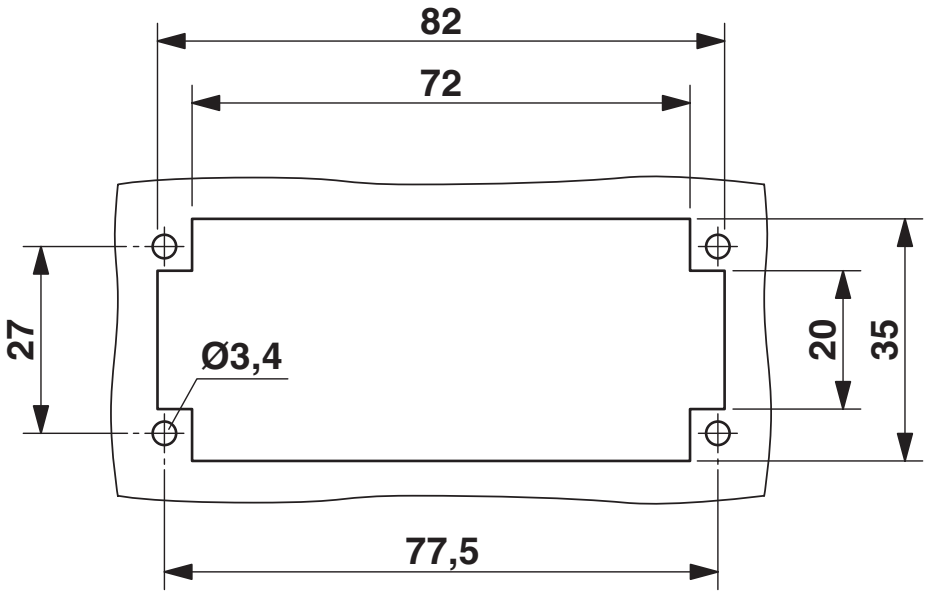


Mounting cutout when used without housing

Schematic diagram

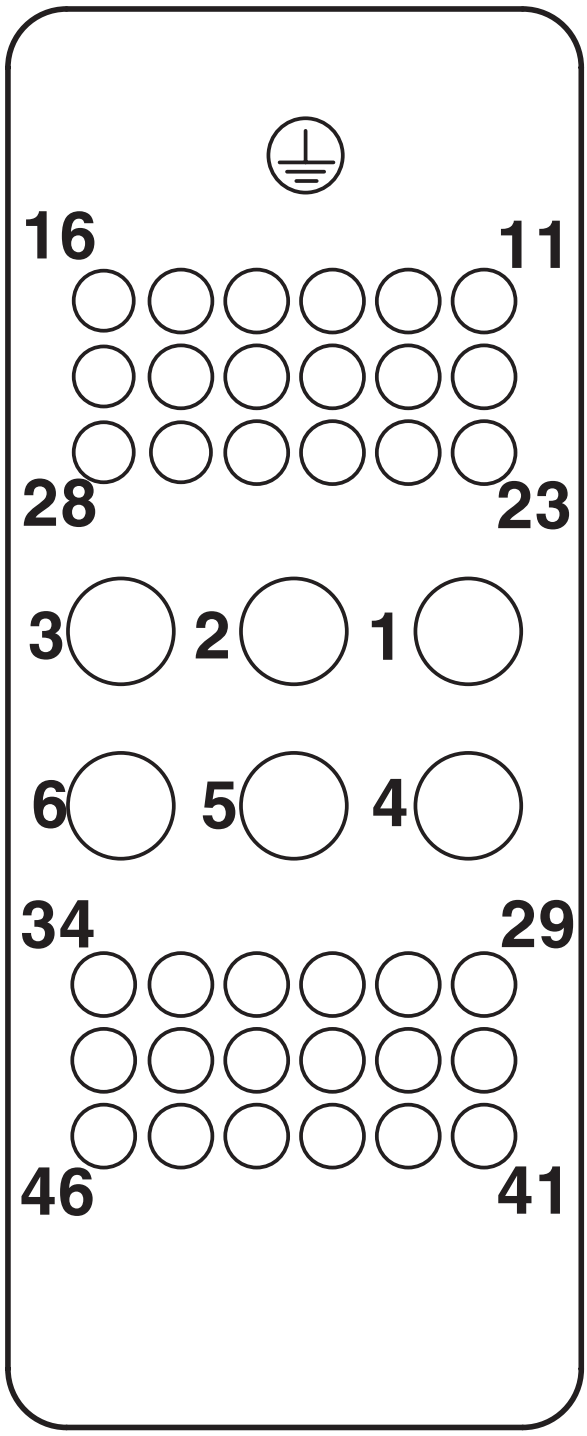


Connector pin assignment, connection side

Diagram

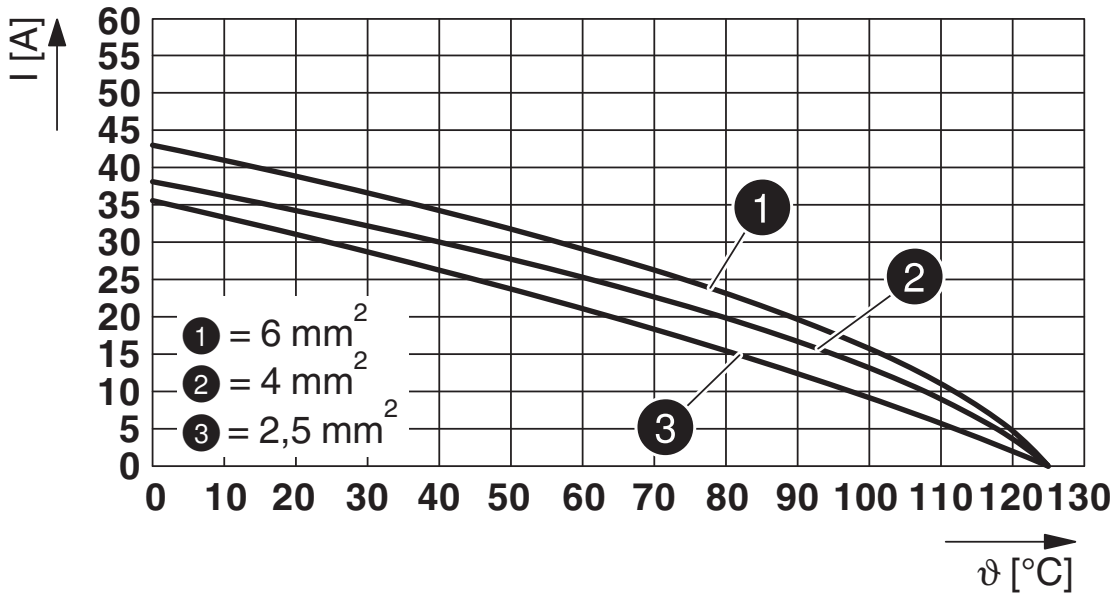


Derating diagram

## Approvals

To download certificates, visit the product detail page: https://www.phoenixcontact.com/us/products/1636389

**UL Recognized**
Approval ID: E118976

| | Nominal voltage $U_N$ | Nominal current $I_N$ | Cross section AWG | Cross section $mm^2$ |
|---|---|---|---|---|
| keine | | | | |
| Power | 600 V | 40 A | - 10 | - |
| Control | 600 V | 10 A | 14 | - |

## Classifications

### ECLASS

| | |
|---|---|
| ECLASS-13.0 | 27440205 |
| ECLASS-15.0 | 27440205 |

### ETIM

| | |
|---|---|
| ETIM 10.0 | EC000438 |

### UNSPSC

| | |
|---|---|
| UNSPSC 21.0 | 39121500 |

## Environmental product compliance

EU RoHS

| | |
|---|---|
| Fulfills EU RoHS substance requirements | Yes, No exemptions |

China RoHS

| | |
|---|---|
| Environment friendly use period (EFUP) | EFUP-E |
| | No hazardous substances above the limits |

EU REACH SVHC

| | |
|---|---|
| REACH candidate substance (CAS No.) | No substance above 0.1 wt% |

EF3.1 Climate Change

| | |
|---|---|
| CO2e kg | 6.33 kg CO2e |


Phoenix Contact 2026 © - all rights reserved
https://www.phoenixcontact.com



Phoenix Contact USA
586 Fulling Mill Road
Middletown, PA 17057, United States
(+717) 944-1300
info@phoenixcon.com