HC-K 6/12-EBUS - Contact insert

1636363

https://www.phoenixcontact.com/us/products/1636363

Please be informed that the data shown in this PDF document is generated from our online catalog. Please find the complete data in the user documentation. Our general terms of use for downloads are valid.



Contact insert, number of positions: 6+12+PE, size: B16, power contacts: 6, control contacts: 12, Socket, Axial screw connection, 690 V, 40 A, 2.5 mm^2 ... 10 mm^2, application: Power/signal

Your advantages

- Shock and vibration-resistant in accordance with DIN EN 61373

Commercial data

Item number	1636363
Packing unit	1 pc
Minimum order quantity	1 pc
Sales key	BF61
Product key	AF7ABA
GTIN	4046356011501
Weight per piece (including packing)	151.8 g
Weight per piece (excluding packing)	151.2 g
Customs tariff number	85366990
Country of origin	DE

Technical data

Notes

General	For HEAVYCON ADVANCE and HEAVYCON housing of type B16/B32, axial connection for 2 mm Allen wrench
General	Connectors may be operated only when there is no load/voltage.
General	The axial screw connection must be established using a 2 mm Allen key (for stranded conductors only)

Mounting

Assembly note	To ensure correct use, installation in housing with IP54 protection or better is required
	Note regarding axial connection technology: Only for stranded wires. The specified conductor cross-sections refer to the geometric cross section of the cable used. Cables with a geometric cross section which deviates significantly from the nominal cable cross section must be checked before use. The axial connection technology connection space is designed for fine strand cables according to VDE 0295 Class 5. Deviating cable structures (e.g., Class 6 cables) must be checked before use. **Assembly instructions** Before assembly, ensure that the tapered screw is fully loosened (chamber is open). Cables must not be twisted. The wires must be pushed into the contact chamber as far as they will go (until the insulation touches the contact). Hold the wires in position and tighten using an Allen key. The used wire end must be cut off before reconnection. The terminal screw must only be retightened once to prevent the litz wires from breaking. To prevent damage to the contact, the wire/cable must be mechanically held at an appropriate distance from the connection point (e.g., when used in a plate cut out). For notes on correct execution, see DIN VDE 0100-520:2003-06. Unused connections must be tightened with maximum torque.

Product properties

Product type	Contact insert with a fixed no. of positions
Series	HC-K
Application	Power/signal
Type	B16
	B32
Number of positions	18
Connection profile	6+12+PE
Contact numbering	1 - 6 (power contacts)
	11 - 22 (control contacts)
No. of power contacts	6
No. of control contacts	12
Contact material type	turned

Screwdriver blade	0.5 x 3.5 mm (control contacts)

Insulation characteristics

Overvoltage category	III
Degree of pollution	3

Dimensions

Dimensional drawing	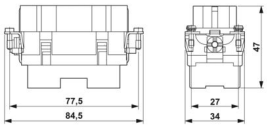
Width	34 mm
Height	47 mm
Length	84.1 mm
Drill hole distance, horizontal	77.5 mm

Mechanical characteristics

Contact diameter	4 mm

Connection data

Connection technology

Connection technology	Axial screw connection (power contacts)
	Screw connection (control contacts)

Conductor connection

Conductor cross-section	2.5 mm² ... 10 mm² (power contacts)
	0.2 mm² ... 2.5 mm² (control contact)
Connection cross section AWG	12 ... 8 (power contacts)
	24 ... 14 (control contacts)
Tightening torque	2 Nm ... 2.5 Nm (PE connection)
	0.5 Nm ... 0.8 Nm (Mounting screws for mounting in the HEAVYCON housing)
	0.5 Nm ... 0.8 Nm (control contacts)
	1.5 Nm (Power 2.5 mm² ... 4 mm²)
	2 Nm (Power 6 mm² ... 10 mm²)
Stripping length of the individual wire	8 mm +1 mm (Power 6 mm² ... 10 mm²)
	10 mm (Signal)
	5 mm +1 mm (Power 2.5 mm² ... 4 mm²)

Electrical properties

Rated voltage (III/3)	690 V (power contacts)
	230 V (Signal contacts, conductor earth)
	400 V (Signal contacts, conductor-conductor)
Rated surge voltage	8 kV (power contacts)

	4 kV (control contacts)
Rated current	40 A (power contacts)
	10 A (control contacts)

Mechanical properties

Mechanical data

Insertion/withdrawal cycles	≥ 500

Material specifications

Flammability rating according to UL 94	V0
Contact material	Cu alloy
Contact carrier material	PC
Material of contact surface, power contact	Ag
Material of contact surface, control contact	Ag

Environmental and real-life conditions

Ambient conditions

Ambient temperature (operation) (Operation)	-40 °C ... 125 °C

Drawings

Dimensional drawing

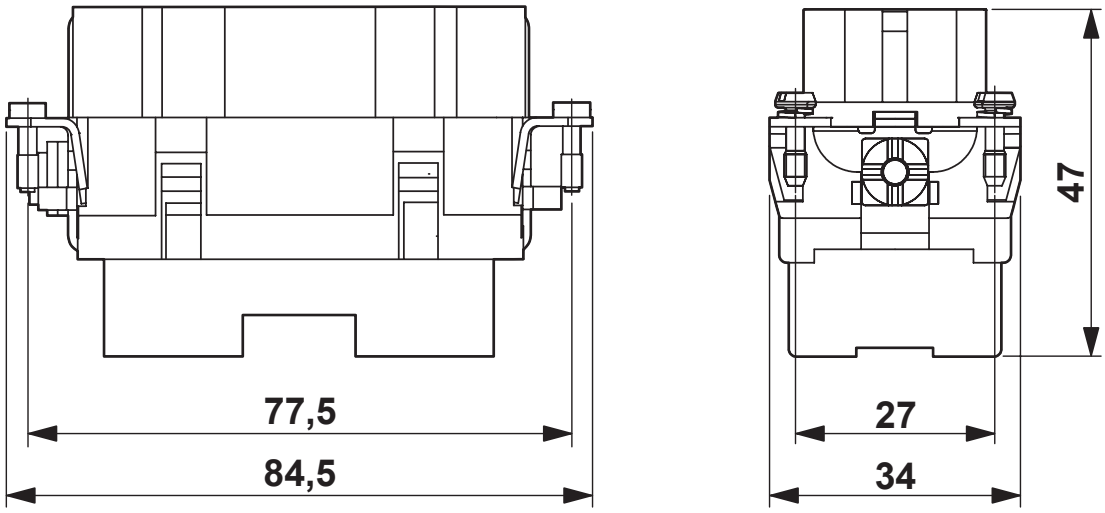

Dimensional drawing

Dimensional drawing

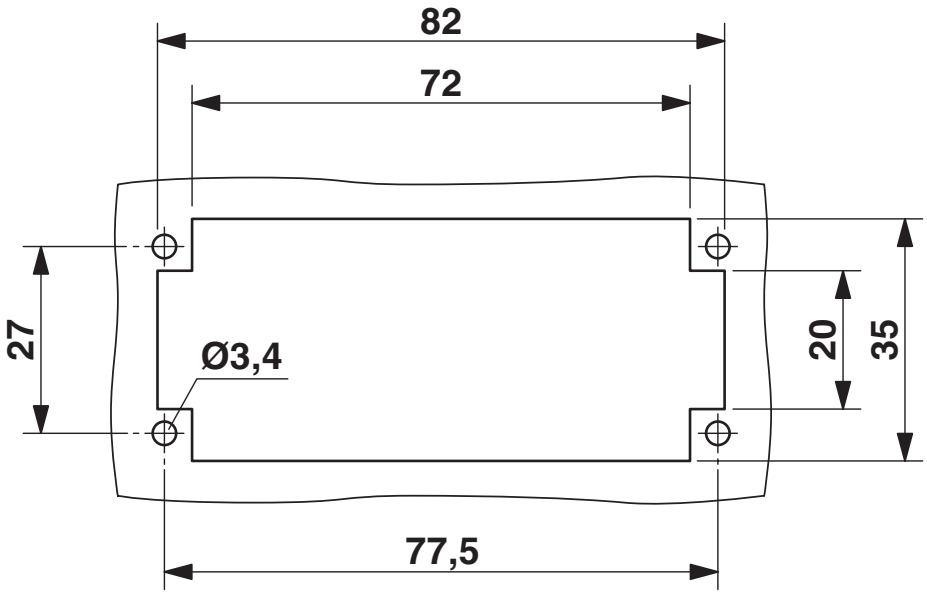

Mounting cutout when used without housing

Schematic diagram

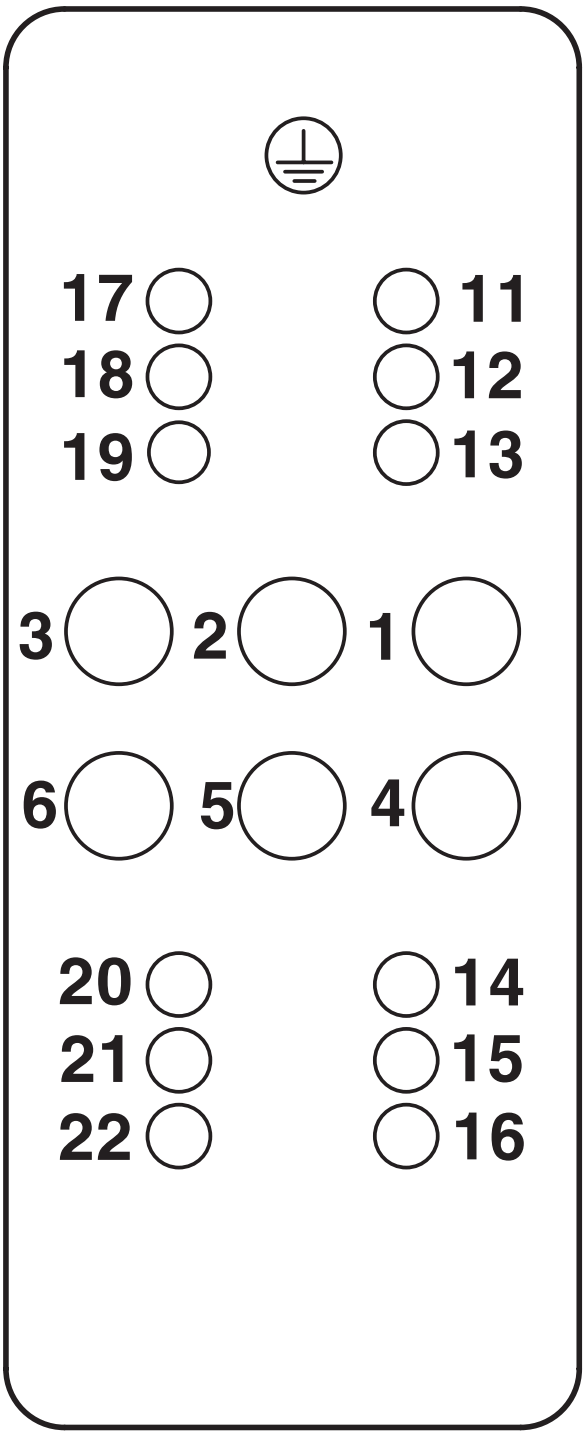

Connector pin assignment, connection side

Schematic diagram

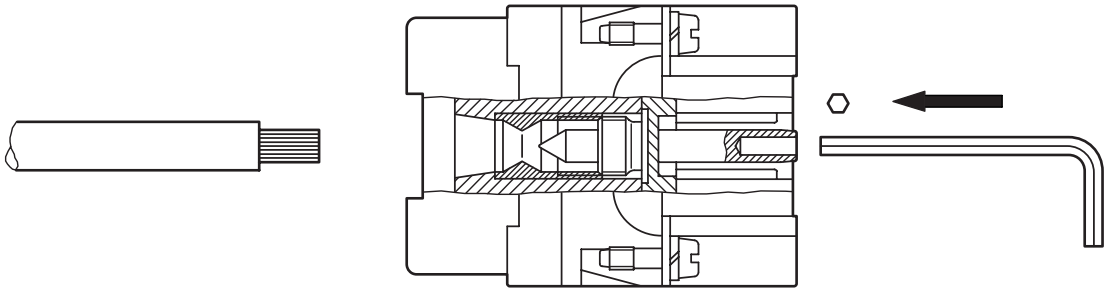

Axial connection

Diagram

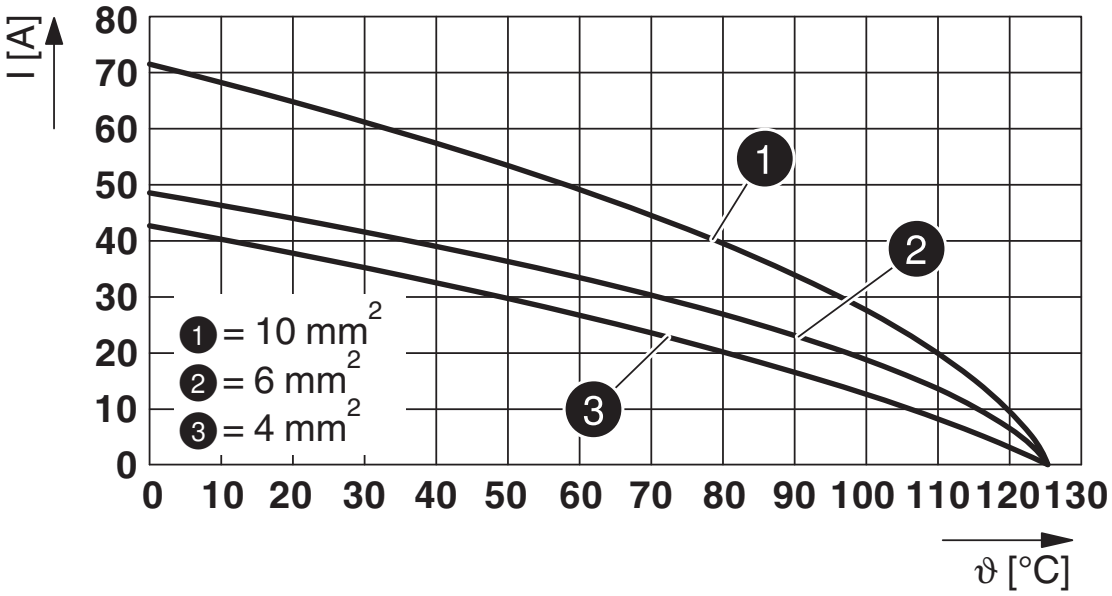

Derating curve

Approvals

To download certificates, visit the product detail page: https://www.phoenixcontact.com/us/products/1636363

cUL Recognized
Approval ID: E118976

	Nominal voltage U_N	Nominal current I_N	Cross section AWG	Cross section mm^2
keine				
	690 V	40 A	14 - 8	-

UL Recognized
Approval ID: E118976

	Nominal voltage U_N	Nominal current I_N	Cross section AWG	Cross section mm^2
keine				
	690 V	40 A	14 - 8	-

Classifications

ECLASS

ECLASS-13.0	27440205
ECLASS-15.0	27440205

ETIM

ETIM 10.0	EC000438

UNSPSC

UNSPSC 21.0	39121500

Environmental product compliance

EU RoHS

Fulfills EU RoHS substance requirements	Yes
Exemption	6(c)

China RoHS

Environment friendly use period (EFUP)	EFUP-50
	An article-related China RoHS declaration table can be found in the download area for the respective article under "Manufacturer declaration". For all articles with EFUP-E, no China RoHS declaration table issued and required.

EU REACH SVHC

REACH candidate substance (CAS No.)	Lead(CAS: 7439-92-1)
SCIP	f694e744-df6d-40d7-b471-c34aa8534eeb

EF3.1 Climate Change

CO2e kg	10.064 kg CO2e

Phoenix Contact 2026 © - all rights reserved
https://www.phoenixcontact.com

Phoenix Contact USA
586 Fulling Mill Road
Middletown, PA 17057, United States
(+717) 944-1300
info@phoenixcon.com