# EV-T2G3PC-1AC32A-4,0M6,0EHBK01 - AC charging cable

1627133

https://www.phoenixcontact.com/us/products/1627133

Please be informed that the data shown in this PDF document is generated from our online catalog. Please find the complete data in the user documentation. Our general terms of use for downloads are valid.



CHARX connect comfort, Type 2, Mobile AC charging cable, 32 A permanent, 250 V AC, with vehicle charging connector and infrastructure charging plug, cable: 4 m, black, spiraled, with protective cap, housing: black, gray, PHOENIX CONTACT logo, IEC 62196-2, for charging electric vehicles (EV) with alternating current (AC) via type 2 vehicle charging inlets

## Product description

Mobile AC charging cable with vehicle charging connector and infrastructure charging plug for charging electric vehicles (EV) with alternating current (AC) via type 2 vehicle charging inlets, compatible with type 2 infrastructure charging sockets at charging stations for e-mobility (EVSE)

## Your advantages

- Complete product range
- Convenient handling due to the ergonomic, triple award-winning design
- Available with your logo on request - for consistent branding of your charging station
- Longitudinal water tightness reliably prevents water ingress
- Developed and produced in accordance with the IATF 16949 automotive standard and ISO 9001
- Tested in accordance with automotive standards LV124, LV214, and LV215-2
- Tested in accordance with EV Ready 37 requirements
- Laser-marked mating face in accordance with DIN EN 17186

## Commercial data

| | |
|---|---|
| Item number | 1627133 |
| Packing unit | 1 pc |
| Minimum order quantity | 1 pc |
| Product key | XWBEBB |
| GTIN | 4055626299464 |
| Weight per piece (including packing) | 2,965 g |
| Weight per piece (excluding packing) | 2,826 g |
| Country of origin | PL |

# EV-T2G3PC-1AC32A-4,0M6,0EHBK01 - AC charging cable

1627133

https://www.phoenixcontact.com/us/products/1627133

## Technical data

### Product properties

| | |
|---|---|
| Product type | AC charging cable |
| Product family | CHARX connect comfort |
| Type | Mobile AC charging cable |
| | with vehicle charging connector and infrastructure charging plug |
| Design | with protective cap |
| Charging standard | Type 2 |
| Charging mode | Mode 3, Case B |
| Affixed logo | PHOENIX CONTACT logo |
| Customer variations | On request |

### Electrical properties

Charging power and current (AC charging, 1-phase)

| | |
|---|---|
| Type of charging current | AC single-phase |
| Charging current | 32 A AC (1-phase) |
| Charging power | 8 kW (1-phase) |
| Charging power rating | 7.4 kW (1-phase, 6.0 mm²) |
| Operating voltage | typ. 230 V AC |

Pin assignment (Power contacts)

| | |
|---|---|
| Note on the connection method | Crimp connection, cannot be disconnected |
| Number | 3 (L1, N, PE) |
| Rated voltage | 250 V AC |
| Rated current | 32 A |

Pin assignment (Signal contacts)

| | |
|---|---|
| Note on the connection method | Crimp connection, cannot be disconnected |
| Type of signal transmission | Pulse width modulation |
| Number | 2 (CP, PP) |
| Rated voltage | 30 V AC |
| Rated current | 2 A |
| Coding | 220 Ω (between PE and PP) |

### Dimensions

Infrastructure charging plug

| | |
|---|---|
| Dimensional drawing | 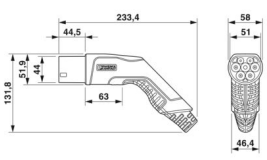 |

| | |
|---|---|
| | Infrastructure plug |
| Width | 58 mm |
| Height | 131.8 mm |
| Depth | 233.4 mm |

Vehicle charging connector

| | |
|---|---|
| Dimensional drawing | 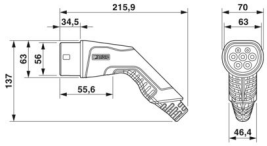<br>Vehicle connector |
| Width | 70 mm |
| Height | 137 mm |
| Depth | 215.9 mm |

## Material specifications

| | |
|---|---|
| Color (Housing) | black (9005) |
| Color (Handle area) | gray (7042) |
| Color (Mating face) | black (9005) |
| Color (Protective cap) | black (9005) |
| Color (Cable) | black (9005) |
| Material (Vehicle charging connector) | Plastic |
| Material (Infrastructure charging plug) | Plastic |
| Material (Cable outer sheath) | TPE-U |
| Material (Contact surface) | Silver |
| Note | The color appearance and gloss level of the charging cable may vary. |

## Cable/line

| | |
|---|---|
| Cable length | 4 m |
| Wiring standards/regulations | prEN 50620/DIN EN 50620 |
| Wiring certifications | VDE |
| Cable type | Class 5 |
| Cable type | spiraled |
| Cable structure | 3 x 6.0 mm² + 1 x 0.5 mm² |
| External cable diameter | 12.80 mm ±0.4 mm |
| Outer sheath, material | TPE-U |
| Block length | 0.63 m ±10 % |
| Coil diameter | 60 mm ±10 % |
| Effective length | max. 4 m ±5 % |
| Cable resistance | ≤ 0.0033 Ω/m (based on a power core, at an ambient |

| | |
|---|---|
| | temperature of 20°C) |
| Bending radius | min. 76.8 mm (6x diameter) |

## Mechanical properties

Mechanical data

| | |
|---|---|
| Insertion/withdrawal cycles | > 10000 |
| Insertion force | < 100 N |
| Withdrawal force | < 100 N |

## Environmental and real-life conditions

Ambient conditions

| | |
|---|---|
| Degree of protection (Vehicle charging connector) | IP44 (plugged in; when plugged in and ready to operate, the degree of protection is only ensued if both plug-in components are original products from Phoenix Contact or suitable standard-compliant products) |
| Degree of protection (Infrastructure charging plug) | IP44 (plugged in; when plugged in and ready to operate, the degree of protection is only ensued if both plug-in components are original products from Phoenix Contact or suitable standard-compliant products) |
| Degree of protection (Protective cap) | IP54 |
| Ambient temperature (operation) | -40 °C ... 50 °C |
| Ambient temperature (storage/transport) | -40 °C ... 80 °C |
| Altitude | 5000 m (above sea level) |

## Standards and regulations

| | |
|---|---|
| Standards/specifications | IEC 62196-2 |
| Note | Compliant with AFIR - EU 2025/656 |

## Drawings

Dimensional drawing

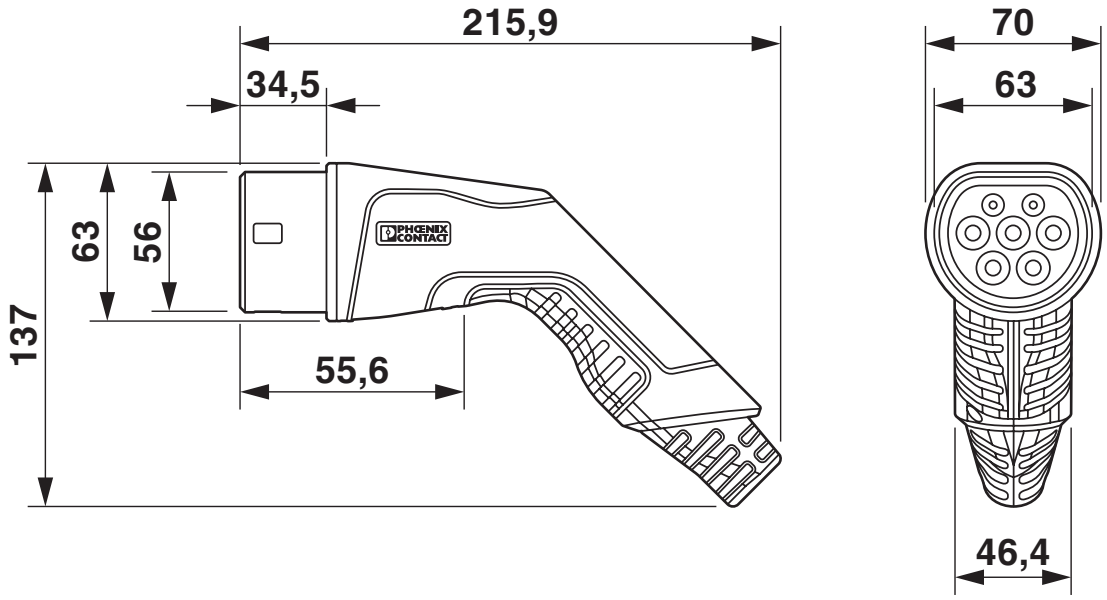


Vehicle connector

Dimensional drawing

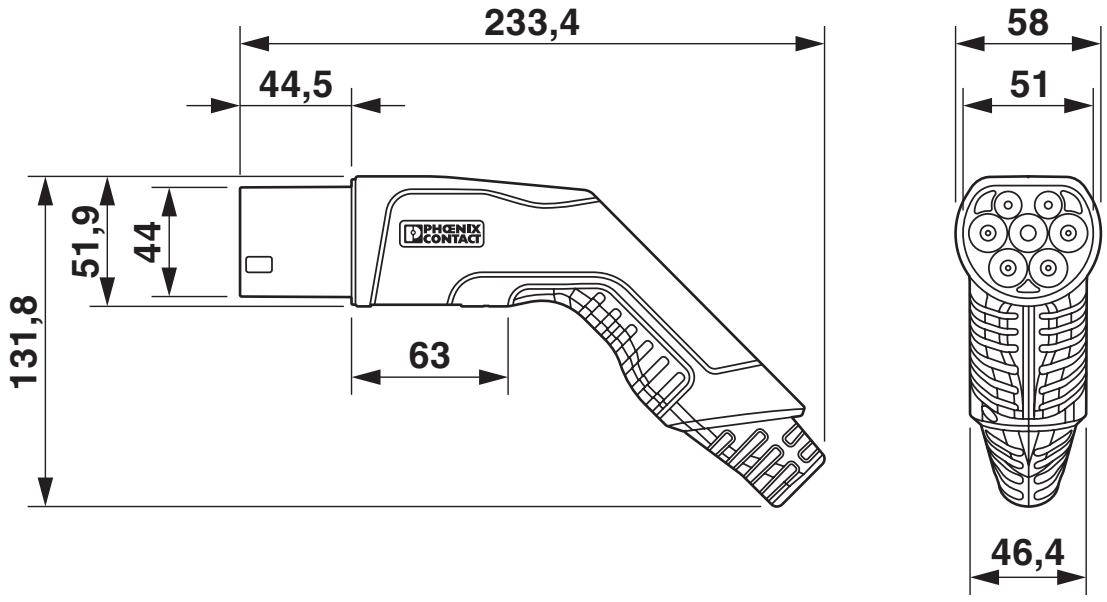


Infrastructure plug

Connection diagram

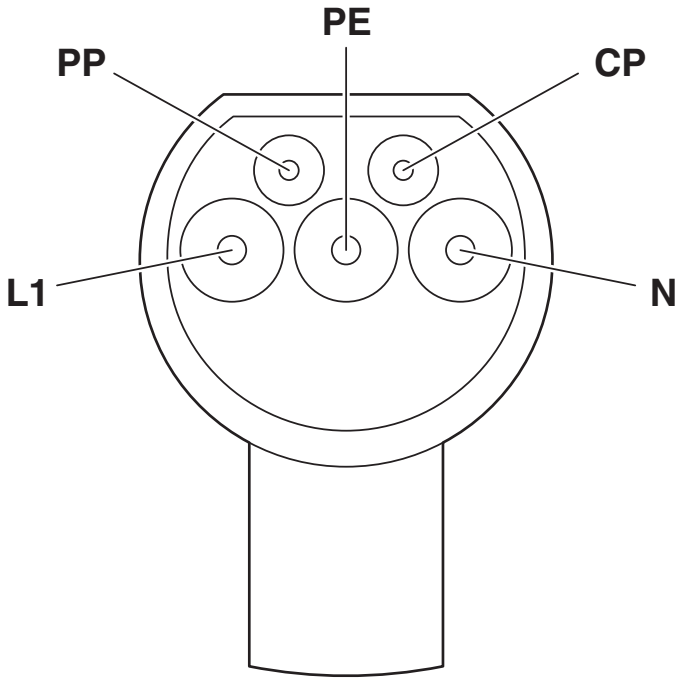


Pin assignment of Infrastructure Plug

Schematic diagram

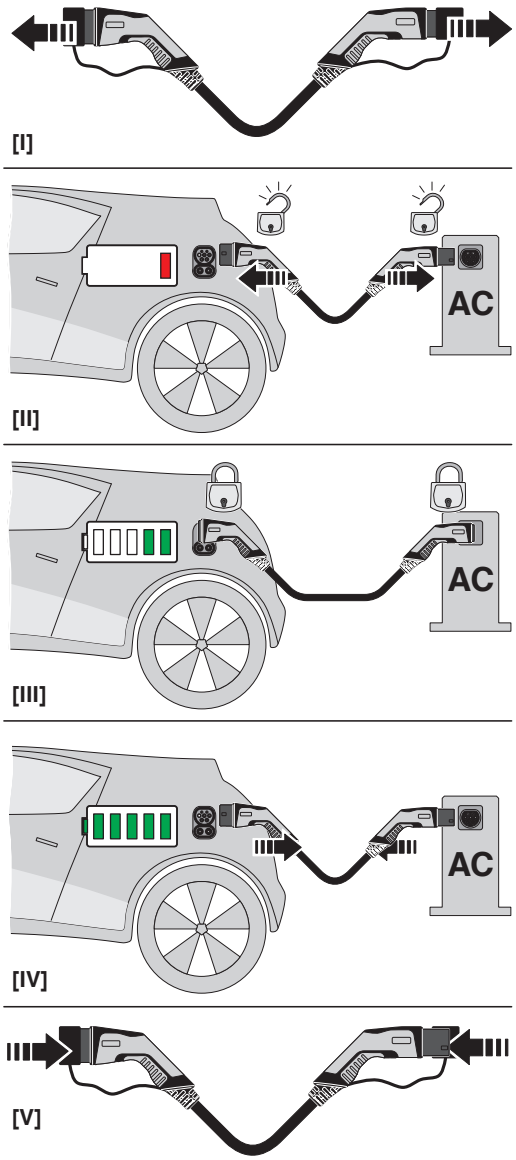


Operating instructions

Schematic diagram

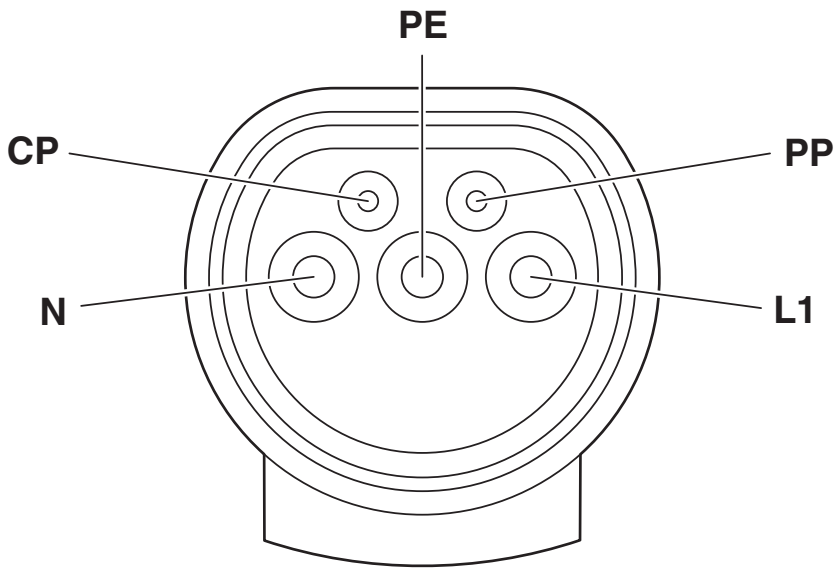


Pin assignment of the Vehicle Connector

Schematic diagram

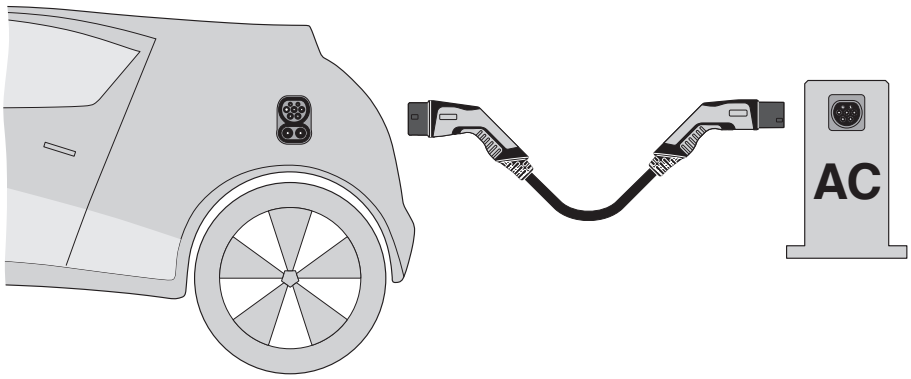


Terminology definition

## Classifications

### ECLASS

| | |
|---|---|
| ECLASS-13.0 | 27144705 |
| ECLASS-15.0 | 27144705 |

### ETIM

| | |
|---|---|
| ETIM 10.0 | EC002897 |

### UNSPSC

| | |
|---|---|
| UNSPSC 21.0 | 39121500 |

## Environmental product compliance

EU RoHS

| | |
|---|---|
| Fulfills EU RoHS substance requirements | Yes |
| Exemption | 6(c) |

China RoHS

| | |
|---|---|
| Environment friendly use period (EFUP) | EFUP-50 |
| | An article-related China RoHS declaration table can be found in the download area for the respective article under "Manufacturer declaration". For all articles with EFUP-E, no China RoHS declaration table issued and required. |

EU REACH SVHC

| | |
|---|---|
| REACH candidate substance (CAS No.) | Lead(CAS: 7439-92-1) |
| SCIP | a12f477a-adf9-4433-9079-d1ea1ffcf469 |

EF3.1 Climate Change

| | |
|---|---|
| CO2e kg | 44.13 kg CO2e |


Phoenix Contact 2026 © - all rights reserved
https://www.phoenixcontact.com



Phoenix Contact USA
586 Fulling Mill Road
Middletown, PA 17057, United States
(+717) 944-1300
info@phoenixcon.com