EV-T2G3C-1AC32A-4,0M6,0ESBK01 - AC charging cable

1623503

https://www.phoenixcontact.com/us/products/1623503

Please be informed that the data shown in this PDF document is generated from our online catalog. Please find the complete data in the user documentation. Our general terms of use for downloads are valid.



CHARX connect comfort, Type 2, AC charging cable, 32 A permanent, 250 V AC, with vehicle charging connector and open cable end, cable: 4 m, black, straight, with protective cap, housing: black, gray, PHOENIX CONTACT logo, IEC 62196-2, for charging electric vehicles (EV) with alternating current (AC) via type 2 vehicle charging inlets

Product description

AC charging cable with vehicle charging connector and free cable end for charging electric vehicles (EV) with alternating current (AC) via type 2 vehicle charging inlets, for installation at charging stations for e-mobility (EVSE)

Your advantages

- Complete product range
- Convenient handling due to the ergonomic, triple award-winning design
- Available with your logo on request - for consistent branding of your charging station
- Longitudinal water tightness reliably prevents water ingress
- Developed and produced in accordance with the IATF 16949 automotive standard and ISO 9001
- Tested in accordance with automotive standards LV124, LV214, and LV215-2
- Tested in accordance with EV Ready 37 requirements
- Laser-marked mating face in accordance with DIN EN 17186

Commercial data

Item number	1623503
Packing unit	1 pc
Minimum order quantity	1 pc
Sales key	EM01
Product key	XWBDBB
GTIN	4055626177847
Weight per piece (including packing)	1,660 g
Weight per piece (excluding packing)	1,660 g
Customs tariff number	85444290
Country of origin	PL

Technical data

Product properties

Product type	AC charging cable
Product family	CHARX connect comfort
Type	AC charging cable
	with vehicle charging connector and open cable end
Design	with protective cap
Charging standard	Type 2
Charging mode	Mode 3, Case C
Affixed logo	PHOENIX CONTACT logo
Customer variations	On request

Electrical properties

Charging power and current (AC charging, 1-phase)

Type of charging current	AC single-phase
Charging current	32 A AC (1-phase)
Charging power	8 kW (1-phase)
Charging power rating	7.4 kW (1-phase, 6.0 mm²)
Operating voltage	typ. 230 V AC

Pin assignment (Power contacts)

Note on the connection method	Crimp connection, cannot be disconnected
Number	3 (L1, N, PE)
Rated voltage	250 V AC
Rated current	32 A

Pin assignment (Signal contacts)

Note on the connection method	Crimp connection, cannot be disconnected
Type of signal transmission	Pulse width modulation
Number	2 (CP, PP)
Rated voltage	30 V AC
Rated current	2 A
Coding	220 Ω (between PE and PP)

Dimensions

Vehicle charging connector

Dimensional drawing	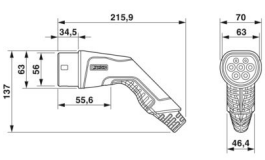

	Make sure that the vehicle charging connector is placed in an appropriate charging connector holder, which ensures a minimum protection rating of IP24 in accordance with IEC 61851-1, for the entire time between charging. To create this charging connector holder, use the dimensions of the vehicle charging connector. Detailed dimensions can also be found in the Download area.
Width	70 mm
Height	137 mm
Depth	215.9 mm

Material specifications

Color (Housing)	black (9005)
Color (Handle area)	gray (7042)
Color (Mating face)	black (9005)
Color (Protective cap)	black (9005)
Color (Cable)	black (9005)
Material (Vehicle charging connector)	Plastic
Material (Cable outer sheath)	TPE-U
Material (Contact surface)	Silver
Note	The color appearance and gloss level of the charging cable may vary.

Cable/line

Cable length	4 m
Wiring standards/regulations	prEN 50620/DIN EN 50620
Wiring certifications	VDE
Cable weight	max. 305.00 kg/km
Cable type	Class 5
Cable type	straight
Cable structure	3 x 6.0 mm² + 1 x 0.5 mm²
External cable diameter	12.80 mm ±0.4 mm
Outer sheath, material	TPE-U
Stripping length of the sheath	70 mm ±5 mm
Stripping length	70 mm ±5 mm
Cable resistance	≤ 0.0033 Ω/m (based on a power core, at an ambient temperature of 20°C)
Bending radius	min. 96 mm (7.5x diameter)

Mechanical properties

Mechanical data

Insertion/withdrawal cycles	> 10000
Insertion force	< 100 N
Withdrawal force	< 100 N

Environmental and real-life conditions

Ambient conditions

Degree of protection (Vehicle charging connector)	IP44 (plugged in; when plugged in and ready to operate, the degree of protection is only ensued if both plug-in components are original products from Phoenix Contact or suitable standard-compliant products)
Degree of protection (Protective cap)	IP54
Ambient temperature (operation)	-40 °C ... 50 °C
Ambient temperature (storage/transport)	-40 °C ... 80 °C
Altitude	5000 m (above sea level)

Standards and regulations

Standards/specifications	IEC 62196-2
Note	Compliant with AFIR - EU 2025/656

Drawings

Dimensional drawing

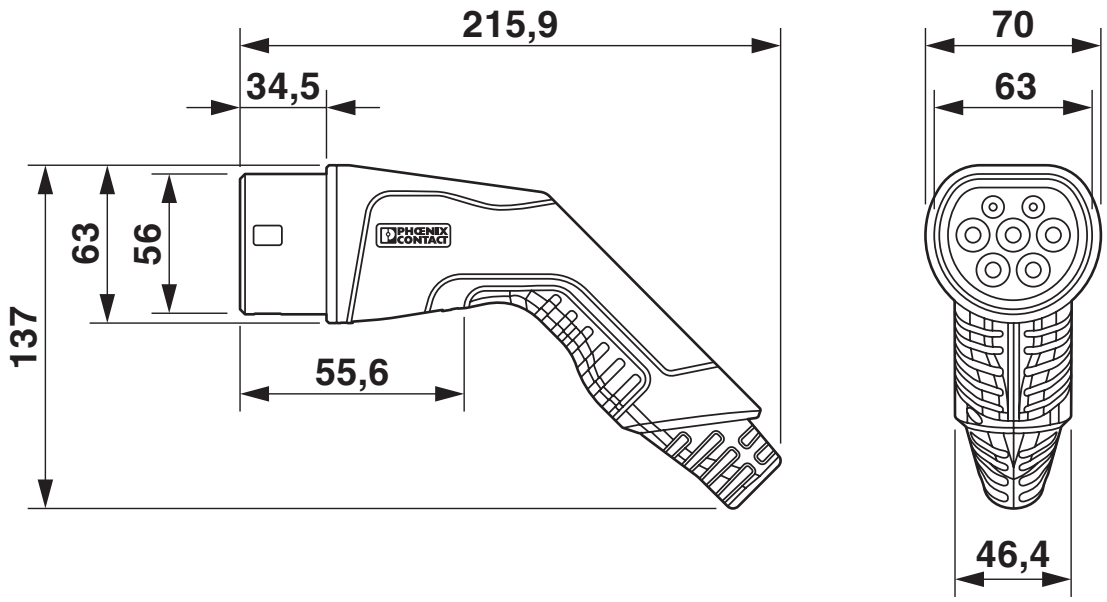

Make sure that the vehicle charging connector is placed in an appropriate charging connector holder, which ensures a minimum protection rating of IP24 in accordance with IEC 61851-1, for the entire time between charging. To create this charging connector holder, use the dimensions of the vehicle charging connector. Detailed dimensions can also be found in the Download area.

Schematic diagram

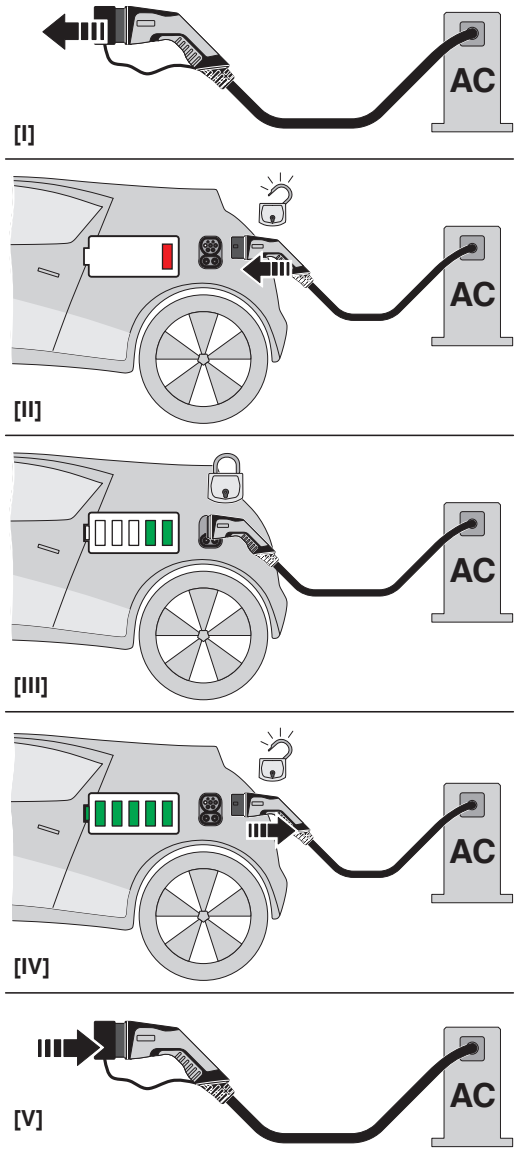

Operating instructions

Schematic diagram

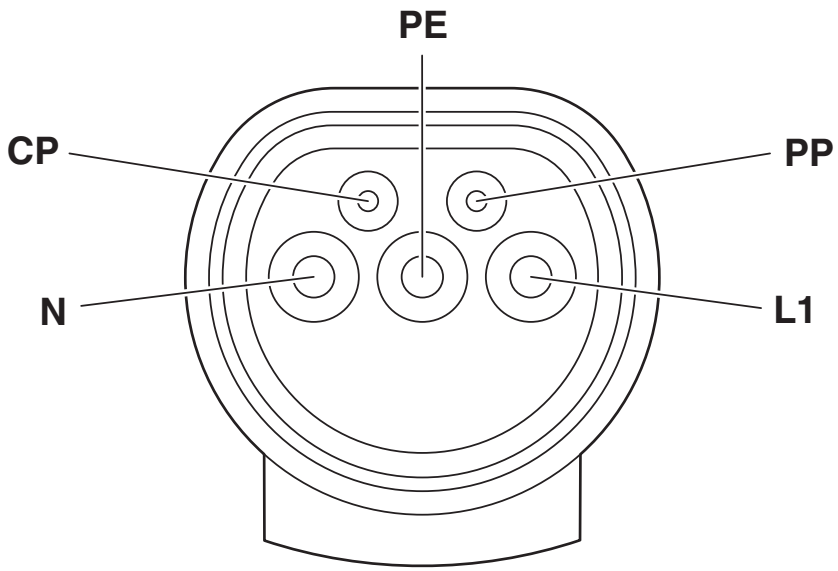

Pin assignment of the Vehicle Connector

Schematic diagram

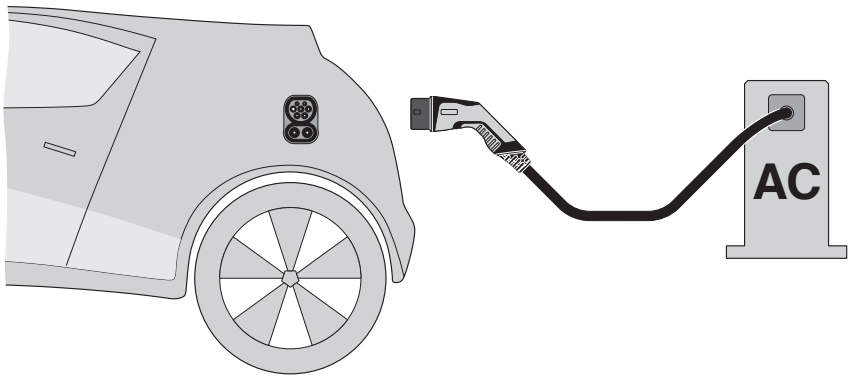

Terminology definition

Classifications

ECLASS

ECLASS-13.0	27144705
ECLASS-15.0	27144705

ETIM

ETIM 10.0	EC002897

UNSPSC

UNSPSC 21.0	39121500

Environmental product compliance

EU RoHS

Fulfills EU RoHS substance requirements	Yes
Exemption	6(c)

China RoHS

Environment friendly use period (EFUP)	EFUP-50
	An article-related China RoHS declaration table can be found in the download area for the respective article under "Manufacturer declaration". For all articles with EFUP-E, no China RoHS declaration table issued and required.

EU REACH SVHC

REACH candidate substance (CAS No.)	Lead(CAS: 7439-92-1)
SCIP	7a4c024a-0570-4679-8390-92825841f5b1

EF3.1 Climate Change

CO2e kg	33.55 kg CO2e

Phoenix Contact 2026 © - all rights reserved
https://www.phoenixcontact.com

Phoenix Contact USA
586 Fulling Mill Road
Middletown, PA 17057, United States
(+717) 944-1300
info@phoenixcon.com