EV-T2M3S-E-LOCK24V - Locking

1622317

https://www.phoenixcontact.com/us/products/1622317

Please be informed that the data shown in this PDF document is generated from our online catalog. Please find the complete data in the user documentation. Our general terms of use for downloads are valid.



CHARX connect modular, Type 2, GB/T, Locking, Accessories, Single-core wires connected at one end, length: 0.5 m, locking actuator: 24 V, 4-pos., with single-core wires, without holder, for locking CHARX connect modular infrastructure charging sockets when plug is inserted, IEC 61851-1

Product description

Locking actuator with 24 V power supply for infrastructure charging sockets and vehicle charging inlets

Your advantages

- Integrated interlock during charging
- Manual emergency release of the locking actuator
- Developed and produced in accordance with the IATF 16949 automotive standard and ISO 9001
- Uniform, space-saving installation space

Commercial data

Item number	1622317
Packing unit	1 pc
Minimum order quantity	10 pc
Sales key	EM01
Product key	XWBFYY
GTIN	4055626033808
Weight per piece (including packing)	147 g
Weight per piece (excluding packing)	95 g
Customs tariff number	85011099
Country of origin	PL

Technical data

Product properties

Product type	Locking actuator
Product family	CHARX connect modular
Type	Accessories
Design	with single-core wires
	without holder
Compatibility	CHARX connect modular
	CHARX connect basic (additional holder required, see accessories)
Charging standard	Type 2
	GB/T
Charging mode	Mode 2, 3, 4

Electrical properties

Locking actuator

Locking actuator	24 V, 4-pos.
	Position can be freely selected
Possible power supply range at the motor	22 V ... 26 V
Maximum voltage for locking detection	30 V
Typical motor current for locking	0.05 A
Reverse current of the motor	max. 0.5 A
Max. dwell time with reverse current	1 s
Recommended adaptation time	600 ms
Pause time after entry or exit path	3 s
Service life insertion cycles	> 10000 load cycles
Lock recognition	available
Mechanical emergency release	available
Ambient temperature (operation)	-30 °C ... 50 °C

Material specifications

Color (Locking)	black (9005)

Cable/line

Cable length	0.5 m
Cable type	Single-core wires connected at one end
Cable structure	4 x 0.5 mm²
Single wire, material	PVC
Single wire, color	BU/RD
	BU/GN
	BU/YE
	BU/BN

External cable diameter	1.60 mm ±0.20 mm
Cable resistance	≤ 37.1 Ω/m

Environmental and real-life conditions

Ambient conditions

Ambient temperature (operation)	-30 °C ... 50 °C
Ambient temperature (storage/transport)	-40 °C ... 80 °C
Altitude	5000 m (above sea level)

Standards and regulations

Standards

Standards/regulations	IEC 61851-1

Drawings

Schematic diagram

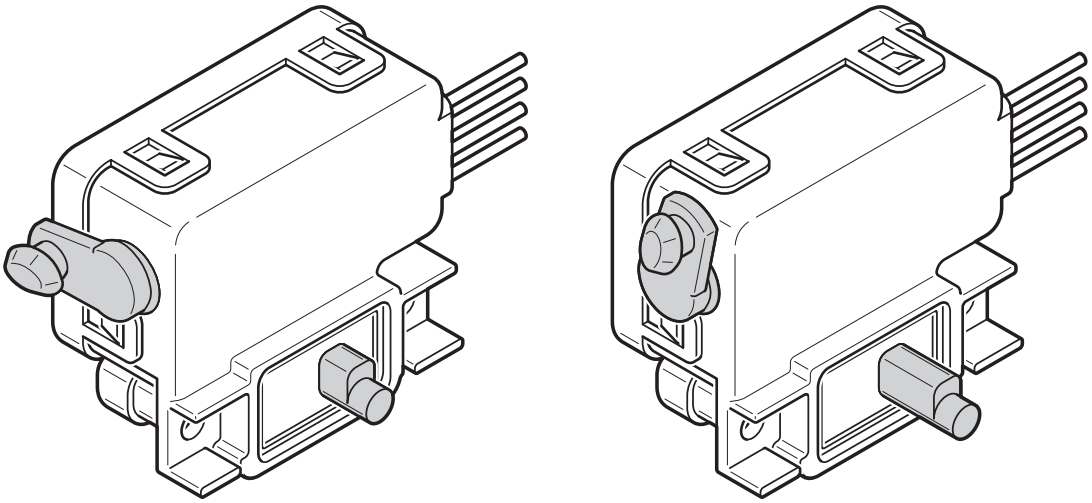

Lever positions for emergency release

Schematic diagram

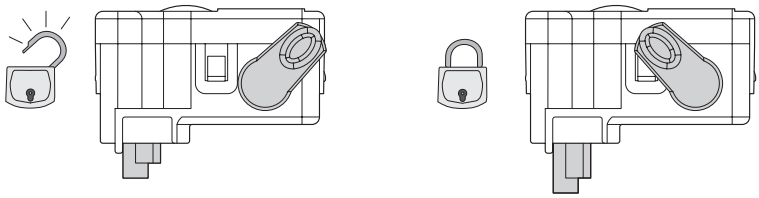

$R_U = \infty\ \Omega$ $R_L = 0\ \Omega$

Lever positions for emergency release

Schematic diagram

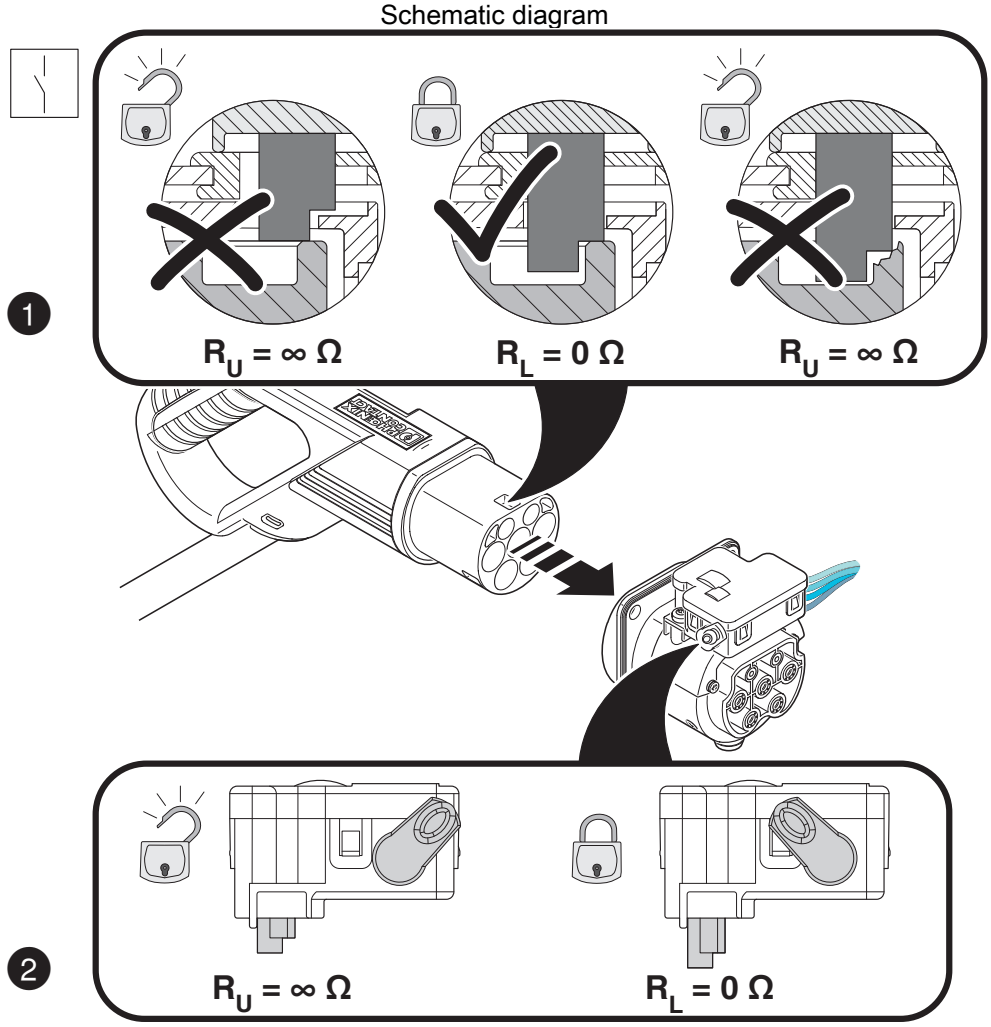

Detection of the Infrastructure Plug

Diagram

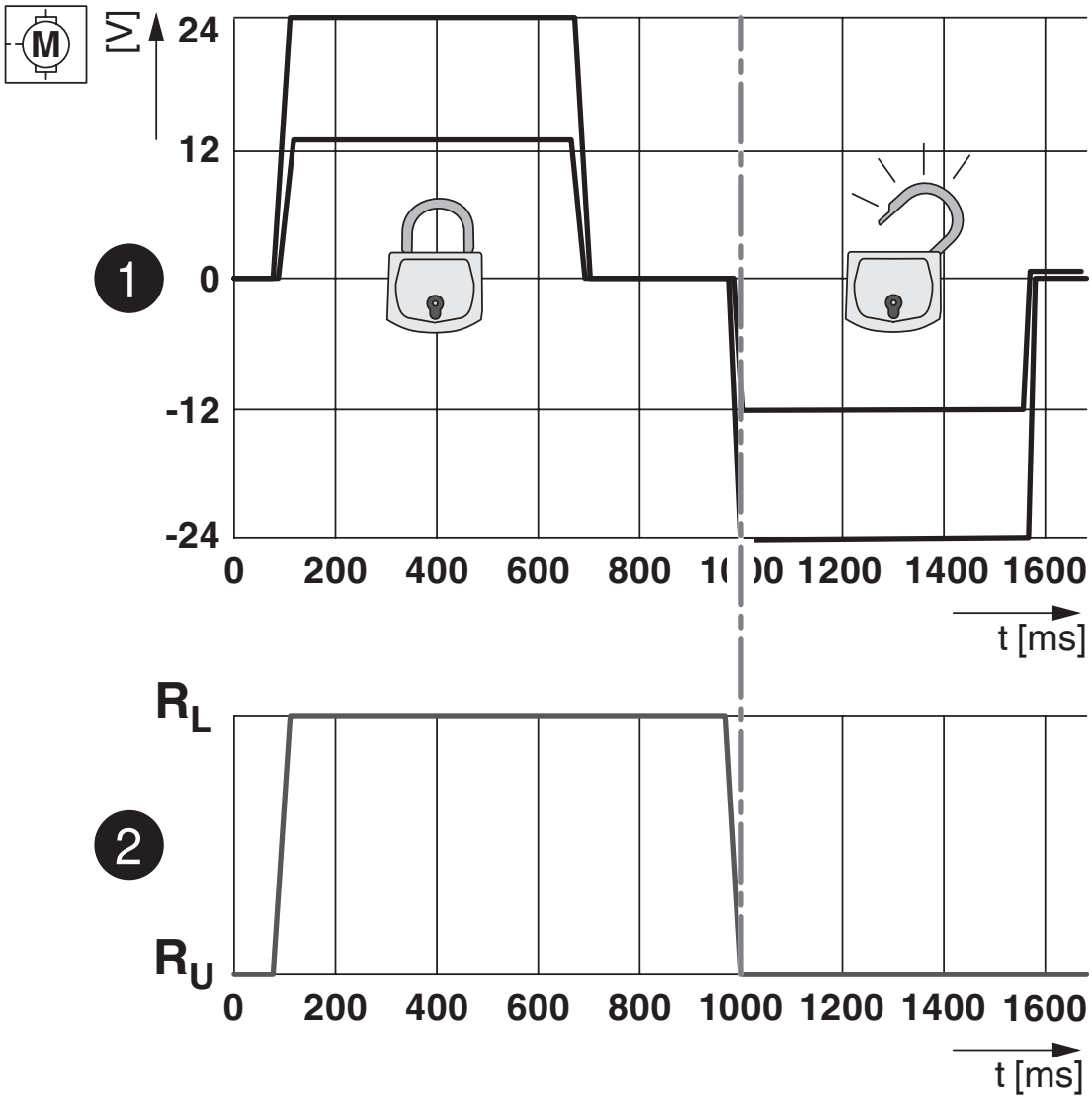

Locking states of the locking actuator

Block diagram

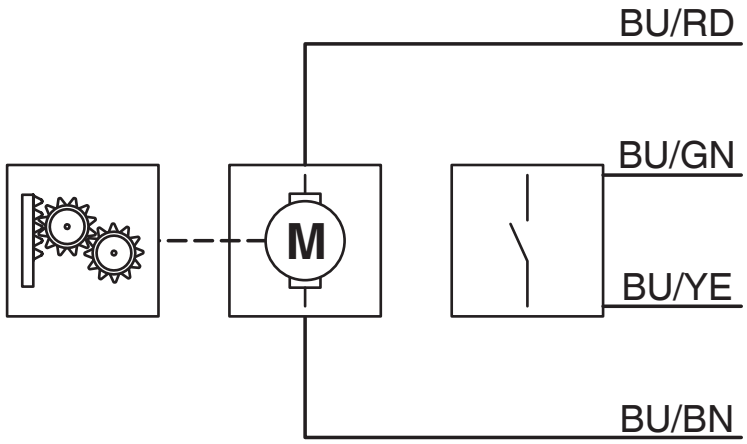

Block diagram of the locking actuator

Classifications

ECLASS

ECLASS-15.0	27144792
ECLASS-13.0	27144792

ETIM

ETIM 10.0	EC002884

UNSPSC

UNSPSC 21.0	39121500

Environmental product compliance

EU RoHS

Fulfills EU RoHS substance requirements	Not applicable, No electrical and electronic equipment (EEE), cannot be used in EEE

EU REACH SVHC

REACH candidate substance (CAS No.)	No substance above 0.1 wt%

Phoenix Contact 2026 © - all rights reserved
https://www.phoenixcontact.com

Phoenix Contact USA
586 Fulling Mill Road
Middletown, PA 17057, United States
(+717) 944-1300
info@phoenixcon.com