K-17-M23 M9/2,0-E01/M23 F8 - Connector in molded plastic on both sides

1619295

https://www.phoenixcontact.com/us/products/1619295

Please be informed that the data shown in this PDF document is generated from our online catalog. Please find the complete data in the user documentation. Our general terms of use for downloads are valid.

9 A

IEC



Connector in molded plastic on both sides, application: Signal, straight, number of positions: 17, straight, number of positions: 17, cable length: 2 m, shielded: yes, color of outer sheath: green, this item is expected to be lead-free from Q1 2028 in accordance with RoHS II without exception 6c (Pb < 0.1%), a lead-free alternative is possible on request in advance

Your advantages

- Our standard: robust halogen-free PUR cable
- Simple and safe: 100% electrically tested and assembled ready for use
- Designs with preassembled cables on one or both sides
- High flexibility: customer-specific assemblies and cable lengths can be supplied

ELEKTROGERÄTE RÜCKNAHME

Commercial data

Item number	1619295
Packing unit	1 pc
Minimum order quantity	1 pc
Sales key	AB34
Product key	ABRDFG
GTIN	4046356835107

Weight per piece (including packing)	450 g
Weight per piece (excluding packing)	413.479 g
Customs tariff number	85444290
Country of origin	DE

Technical data

Product properties

Product type	Signal and power cable
Application	Signal

Connector

Connector specifications

No. of pos.	17
Contact switching type	Socket

Connector specifications (second page)

No. of pos.	17
Contact switching type	Pin

Electrical properties

Nominal current I_N	9 A

Cable/line

Cable length	2 m

Cable specifications

Cable type	SSLC11Y
Shielded	yes
Cable structure	3 x 2 x 0.14 mm² + 2 x 0.5 mm² + 4 x 0.14 mm² + 4 x 0.22 mm²
Cable structure (AWG)	26 AWG/3pr + 20 AWG/2c + 26 AWG/4c + 24 AWG/4c
External cable diameter	9.40 mm
Outer sheath, material	TPU
Material wire insulation	TPU
External sheath, color	green
Nominal voltage, cable	30 V
Test voltage	0.5 kV
Rated current	9 A
Smallest bending radius, fixed installation	38 mm
Smallest bending radius, movable installation	94 mm
Ambient temperature (operation) for fixed installation	-30 °C ... 80 °C
Ambient temperature (operation) for flexible installation	-30 °C ... 60 °C

Drawings

Dimensional drawing

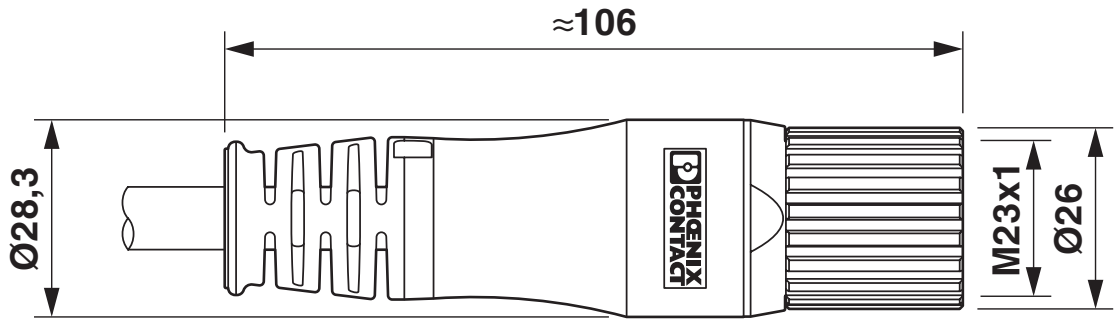

On the female side

Dimensional drawing

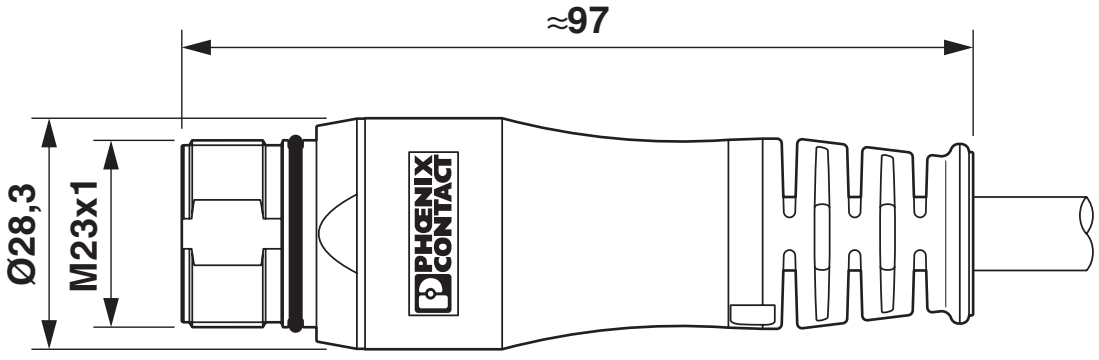

Pin side

Schematic diagram

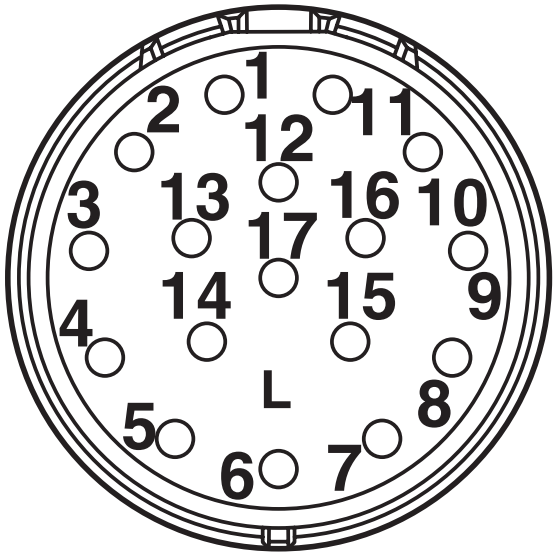

Socket pin assignment

Schematic diagram

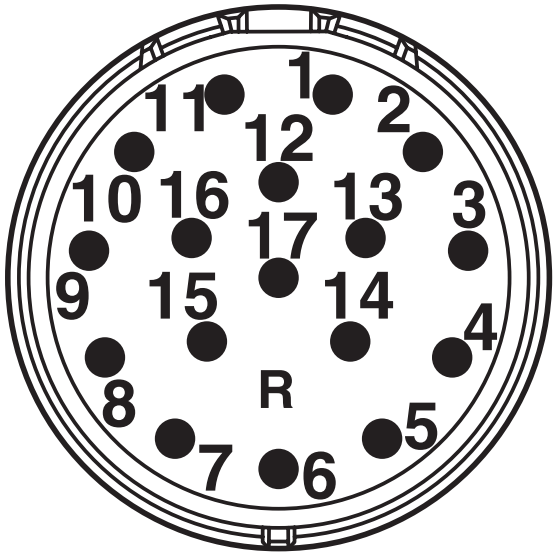

Pin assignment of pin

Circuit diagram

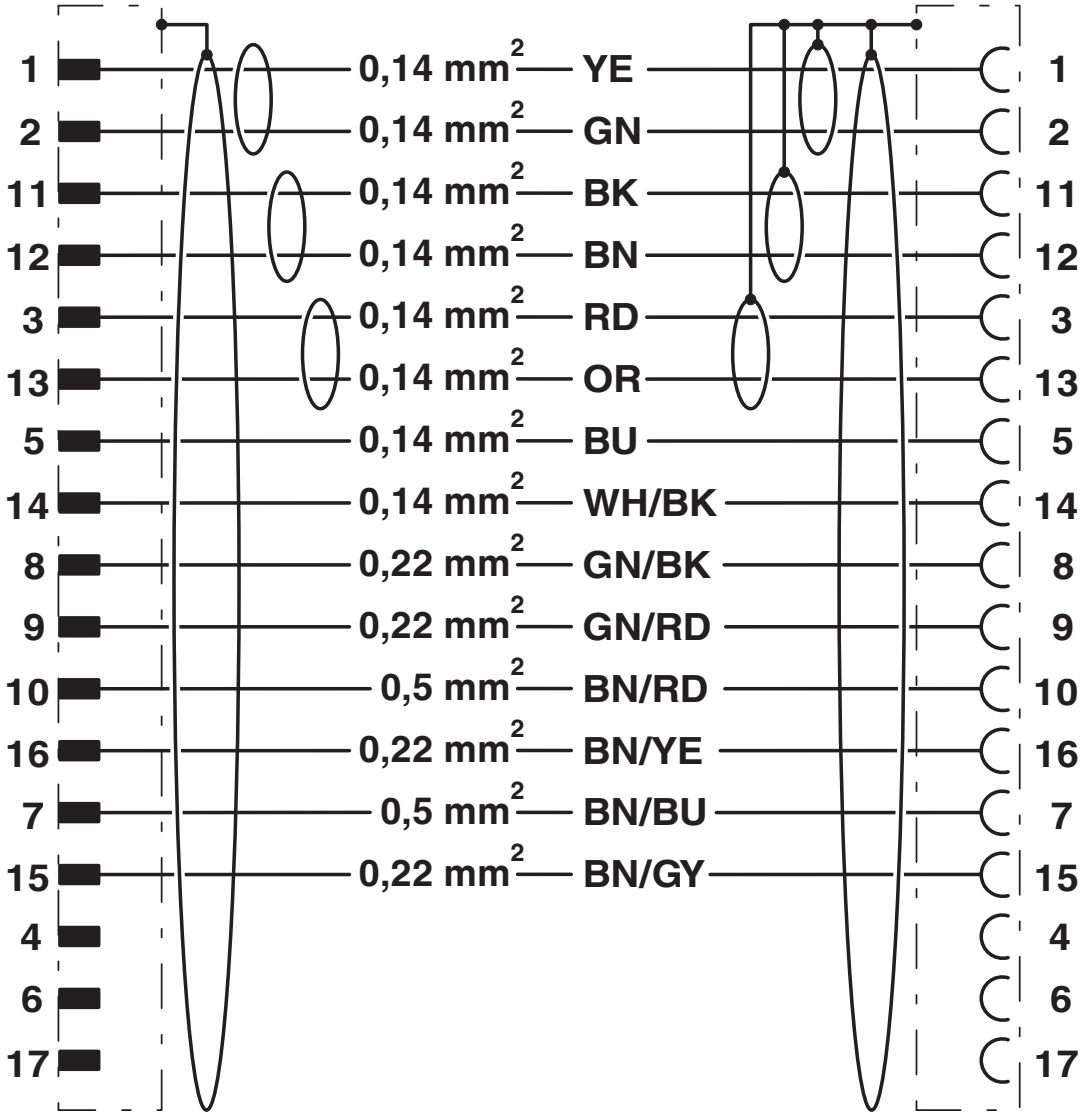

Contact assignment of M23 plugs/sockets

Approvals

To download certificates, visit the product detail page: https://www.phoenixcontact.com/us/products/1619295

EAC
Approval ID: 19060508

UL Listed
Approval ID: E335019-20140707

	Nominal voltage U_N	Nominal current I_N	Cross section AWG	Cross section mm^2
keine				
Power	30 V	5 A	-	-
Signal	30 V	2 A	-	-
Data	30 V	1 A	-	-

cUL Listed
Approval ID: E335019-20140707

	Nominal voltage U_N	Nominal current I_N	Cross section AWG	Cross section mm^2
keine				
Power	30 V	5 A	-	-
Signal	30 V	2 A	-	-
Data	30 V	1 A	-	-

Classifications

ECLASS

ECLASS-13.0	27060106
ECLASS-15.0	27060311

ETIM

ETIM 10.0	EC001855

UNSPSC

UNSPSC 21.0	26121600

Environmental product compliance

EU RoHS

Fulfills EU RoHS substance requirements	Yes
Exemption	6(b), 6(c)

China RoHS

Environment friendly use period (EFUP)	EFUP-50
	An article-related China RoHS declaration table can be found in the download area for the respective article under "Manufacturer declaration". For all articles with EFUP-E, no China RoHS declaration table issued and required.

EU REACH SVHC

REACH candidate substance (CAS No.)	Lead(CAS: 7439-92-1)
SCIP	9fa35fb9-810d-420e-82d2-70370eb9c4f3

Phoenix Contact 2026 © - all rights reserved
https://www.phoenixcontact.com

Phoenix Contact USA
586 Fulling Mill Road
Middletown, PA 17057, United States
(+717) 944-1300
info@phoenixcon.com