ST-17P1N8A8004 - Cable connector

1607626

https://www.phoenixcontact.com/us/products/1607626

Please be informed that the data shown in this PDF document is generated from our online catalog. Please find the complete data in the user documentation. Our general terms of use for downloads are valid.

CRIMP



The figure shows the product with assembled crimp contacts. Please order crimp contacts separately.

Cable connector, application: Feedback, signal, straight, Screw locking mechanism, M17, number of positions: 17, contact connection type: Pin, shielded: yes, degree of protection: IP67, cable diameter range: 8 mm ... 10 mm, number of positions: 17, connection method: Crimp connection, series: ST, This product is in the process of being discontinued. This product must no longer be considered for new projects. Please contact your sales representative for alternatives. Alternative products: 1629050

Your advantages

- Consistent EMC protection for reliable connection solutions in the industrial environment
- Crimping connection: vibration- and temperature-resistant assembly
- Flexible use: reliably connect various cable diameters
- Molded designs with preassembled cables on one or both sides

Commercial data

Item number	1607626
Packing unit	1 pc
Minimum order quantity	1 pc
Note	Made to order (non-returnable)
Sales key	AB31
Product key	ABRACA
GTIN	4046356273374
Weight per piece (including packing)	64.647 g
Weight per piece (excluding packing)	61.43 g
Customs tariff number	85366990
Country of origin	DE

Technical data

Notes

Order information:	Order crimp contacts Ø 0.6 mm separately

Safety note

Safety note	WARNING: The connectors may not be plugged in or disconnected under load. Ignoring the warning or improper use may damage persons and/or property.
	• WARNING: Commission properly functioning products only. The products must be regularly inspected for damage. Decommission defective products immediately. Replace damaged products. Repairs are not possible.
	• WARNING: Only electrically qualified personnel may install and operate the product. They must observe the following safety notes. The qualified personnel must be familiar with the basics of electrical engineering. They must be able to recognize and prevent danger. The relevant symbol on the packaging indicates that only personnel familiar with electrical engineering are allowed to install and operate the product.
	• The products are suitable for applications in plant, controller, and electrical device engineering.
	• When operating the connectors in outdoor applications, they must be separately protected against environmental influences.
	• Assembled products may not be manipulated or improperly opened.
	• Only use mating connectors that are specified in the technical data of the standards listed (e.g. the ones listed in the product accessories online at phoenixcontact.com/products).
	• When using the product in direct connection with third-party manufacturers, the user is responsible.
	• For operating voltages > 50 V AC, conductive connector housings must be grounded
	• Ensure that the protective or functional ground has been properly connected.
	• VDE 0100/1.97 § 411.1.3.2 and DIN EN 60 204/11.98 § 14.1.3 are applicable when combining several circuits in a cable and/or connector
	• Only use tools recommended by Phoenix Contact
	• The installation notes/Design In documents online on the download page at phoenixcontact.com/products must be observed for this product.
	• Operate the connector only when it is fully plugged in and interlocked.
	• Ensure that when laying the cable, the tensile load on the connectors does not exceed the upper limit specified in the standards.
	• Observe the minimum bending radius of the cable. Lay the cable without twisting it.
	• The connector warms up in normal operation. Depending on the ambient conditions, the surface of the connector can continue to warm up. In this case, the user is responsible for posting

	warnings (e.g. DIN EN ISO 13732-1:2008-12).

Product properties

Product type	Circular connector (cable-side)
Series	ST
Application	Feedback, signal
Number of positions	17
Connection profile	17
Shielded	yes
Coding	N
Thread type	M17

Material specifications

Material Housing	GD-Zn
Material Rotating parts	CuZn
Material Housing surface	Ni
Material Insulating body	PA 6.6
Material Seal	FPM (O-ring)

Connection data

Conductor connection

Connection method	Crimp connection

Electrical properties

Contact

Contact diameter	0.6 mm
Nominal current I_N	3.6 A
Nominal voltage U_N	48 V AC
	74 V DC
Overvoltage category	III
Degree of pollution	3
Rated surge voltage	1.5 kV

Connector

Type	straight
Direction of rotation	Standard

Connection 1

Head design	Pin
Head cable outlet	straight
Head thread type	M17

Cable/line

External cable diameter	8 mm ... 10 mm

Environmental and real-life conditions

Ambient conditions

Degree of protection	IP67
Ambient temperature (operation)	-40 °C ... 125 °C
Altitude	3000 m

Drawings

Dimensional drawing

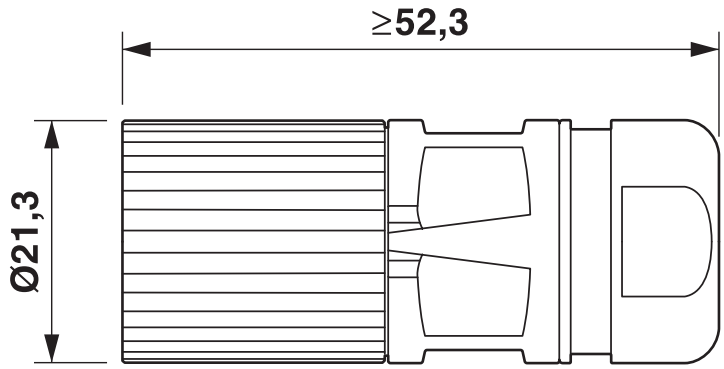

Technical drawings can be found under Downloads

Schematic diagram

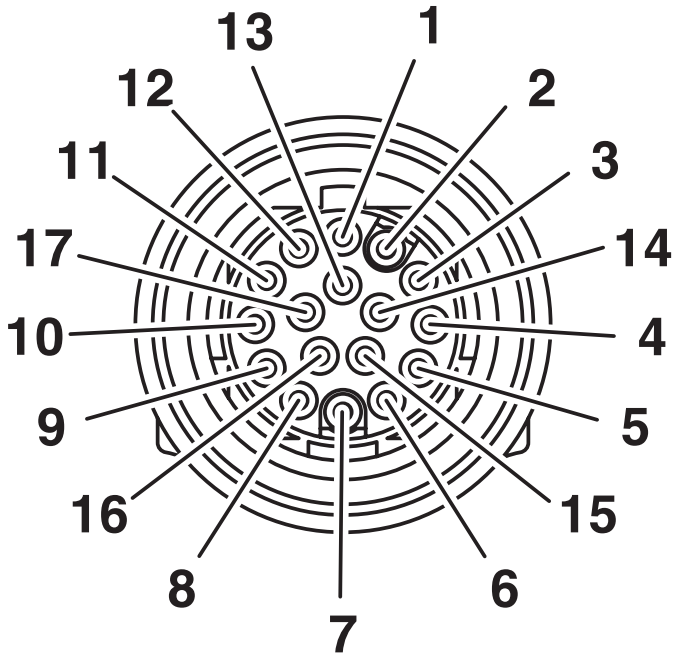

Connector pin assignment

Diagram

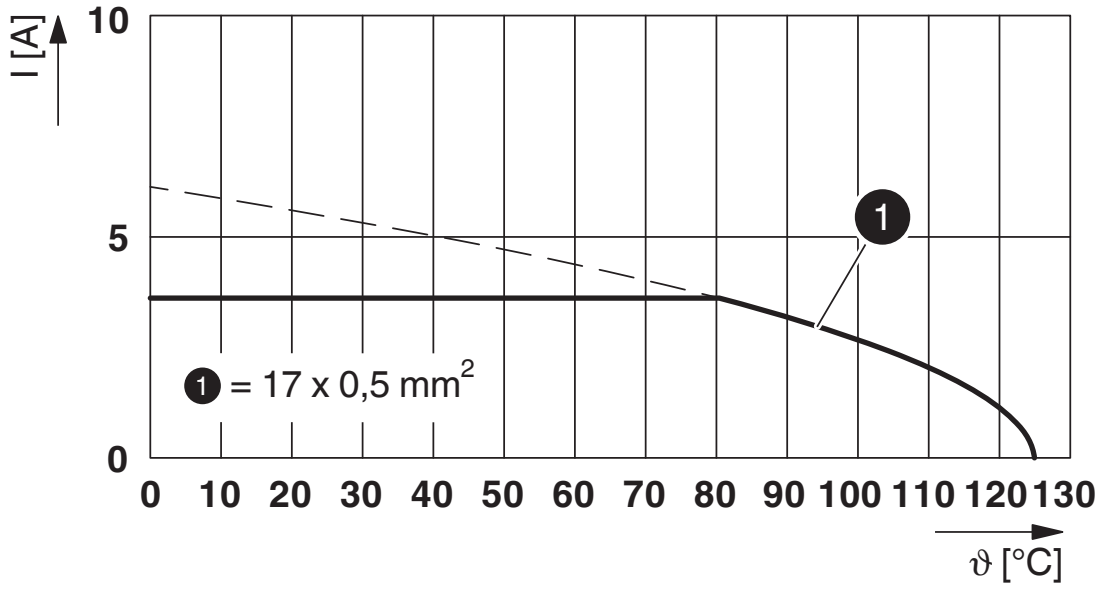

I = current strength, ϑ = ambient temperature, 17x 3.6 A

Approvals

To download certificates, visit the product detail page: https://www.phoenixcontact.com/us/products/1607626

cUL Recognized
Approval ID: E153698-20140124

	Nominal voltage U_N	Nominal current I_N	Cross section AWG	Cross section mm^2
keine				
	48 V	1 A	26	-

UL Recognized
Approval ID: E153698-20140124

	Nominal voltage U_N	Nominal current I_N	Cross section AWG	Cross section mm^2
keine				
	48 V	1 A	26	-

cULus Recognized
Approval ID: E331519-20111129

	Nominal voltage U_N	Nominal current I_N	Cross section AWG	Cross section mm^2
keine				
	48 V	1 A	26	-

Classifications

ECLASS

ECLASS-13.0	27440116
ECLASS-15.0	27440116

ETIM

ETIM 10.0	EC002635

UNSPSC

UNSPSC 21.0	39121400

Environmental product compliance

EU RoHS

Fulfills EU RoHS substance requirements	Yes, No exemptions

China RoHS

Environment friendly use period (EFUP)	EFUP-E
	No hazardous substances above the limits

EU REACH SVHC

REACH candidate substance (CAS No.)	No substance above 0.1 wt%

Phoenix Contact 2026 © - all rights reserved
https://www.phoenixcontact.com

Phoenix Contact USA
586 Fulling Mill Road
Middletown, PA 17057, United States
(+717) 944-1300
info@phoenixcon.com