SL-5ES1N8A8001 - Cable connector

1607501

https://www.phoenixcontact.com/us/products/1607501

Please be informed that the data shown in this PDF document is generated from our online catalog. Please find the complete data in the user documentation. Our general terms of use for downloads are valid.

CRIMP



The figure shows the 8-pos. (4+3+PE) product version

Cable connector, application: Power, straight, Screw locking mechanism, M58, number of positions: 2+3+PE, contact connection type: Socket, shielded: yes, degree of protection: IP67, cable diameter range: 25 mm ... 36 mm, number of positions: 6, connection method: Crimp connection, series: SL, this item is expected to be lead-free from Q4 2026 in accordance with RoHS II without exception 6c (Pb < 0.1%), a lead-free alternative is possible on request in advance

Your advantages

- Consistent EMC protection for reliable connection solutions in the industrial environment
- Crimping connection: vibration- and temperature-resistant assembly
- Reliable transmission of high electrical power

Commercial data

Item number	1607501
Packing unit	1 pc
Minimum order quantity	1 pc
Sales key	AB32
Product key	ABRBHA
GTIN	4046356271660
Weight per piece (including packing)	838.694 g
Weight per piece (excluding packing)	838.694 g
Customs tariff number	85366990
Country of origin	DE

Technical data

Notes

Order information:	Order crimp contacts 2 x Ø 1.6 mm, 4 x Ø 10 mm separately

Product properties

Product type	Circular connector (cable-side)
Series	SL
Application	Power
Number of positions	6
Connection profile	2+3+PE
Shielded	yes
Coding	N
Thread type	M58

Material specifications

Material Housing	Aluminum
Material Housing surface	Anodized aluminum
Material Insulating body	PA 6.6
Material Seal	FPM

Connection data

Conductor connection

Connection method	Crimp connection

Electrical properties

Contact: Contact group 1

Contact diameter	10 mm
Nominal current I_N	150 A
Nominal voltage U_N	630 V
Overvoltage category	III
Degree of pollution	3
Rated surge voltage	6 kV

Contact: Contact group 2

Contact diameter	1.6 mm
Nominal current I_N	12 A
Nominal voltage U_N	250 V
Overvoltage category	III
Degree of pollution	3
Rated surge voltage	4 kV

Connector

Type	straight

Connection 1

Head design	Socket
Head cable outlet	straight
Head thread type	M58

Cable/line

External cable diameter	25 mm ... 36 mm

Environmental and real-life conditions

Ambient conditions

Degree of protection	IP67
Ambient temperature (operation)	-40 °C ... 120 °C
Altitude	2000 m

Drawings

Dimensional drawing

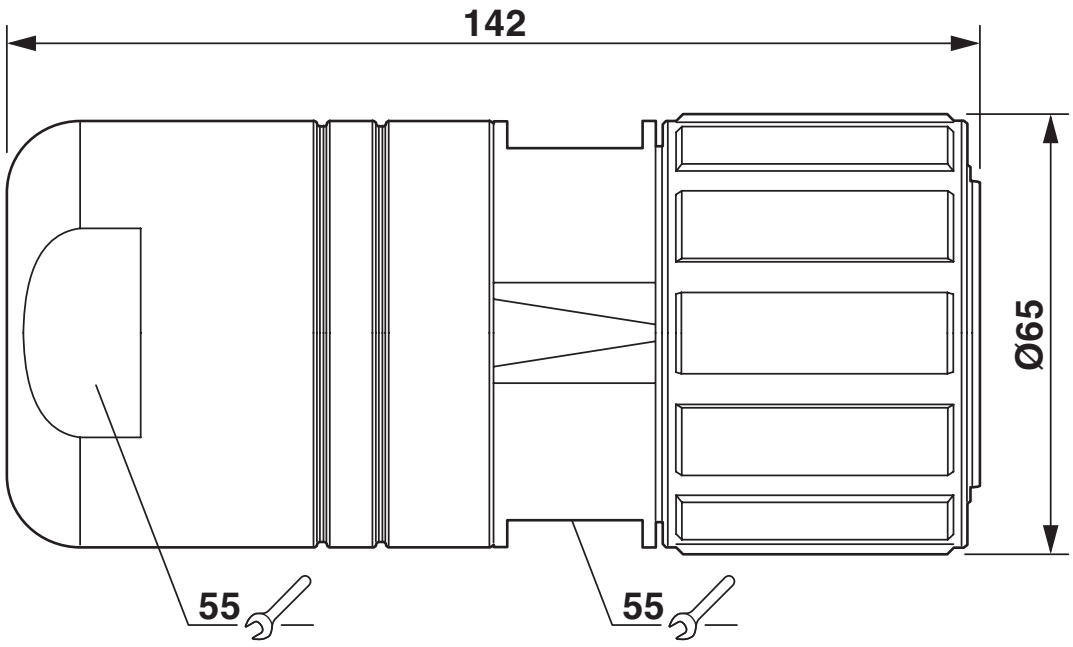

Dimensional drawing

Schematic diagram

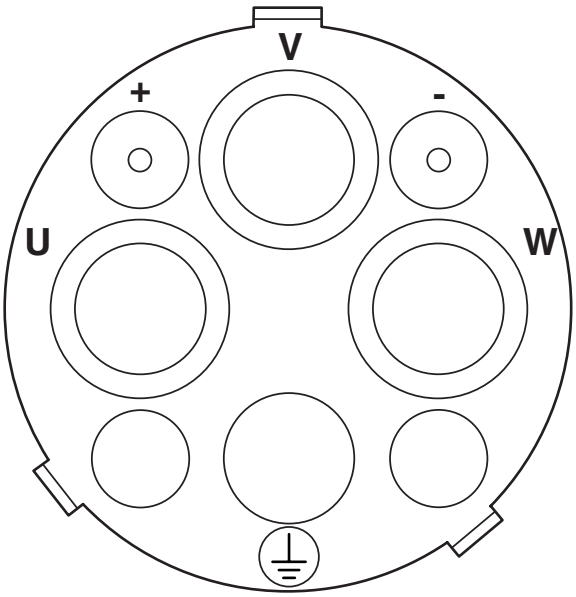

Connector pin assignment

Diagram

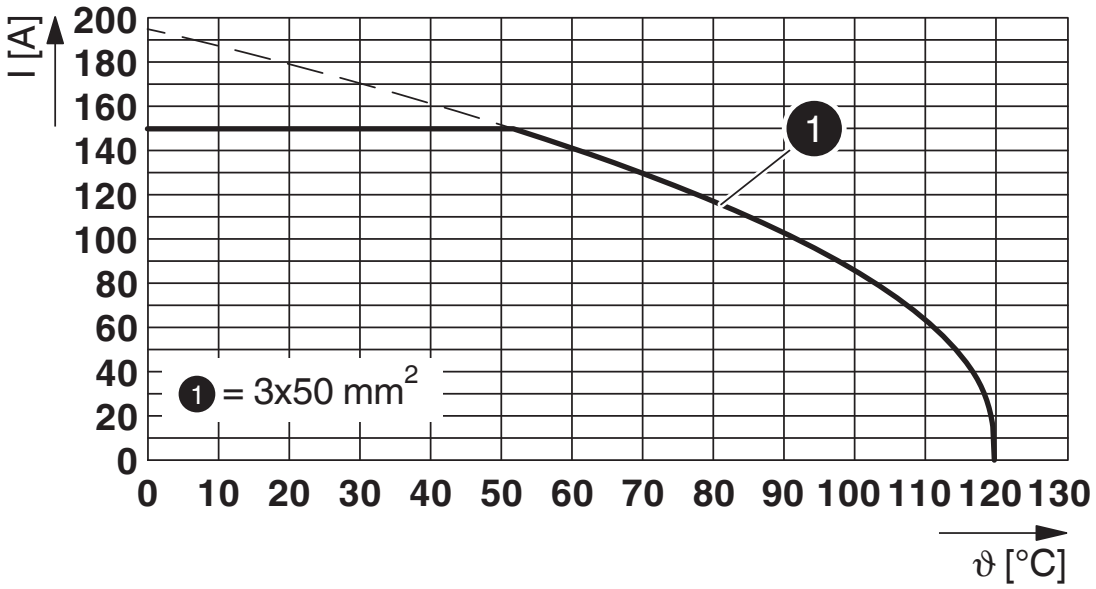

I = current strength, T = ambient temperature

Classifications

ECLASS

ECLASS-13.0	27440116
ECLASS-15.0	27440116

ETIM

ETIM 10.0	EC002635

UNSPSC

UNSPSC 21.0	39121400

Environmental product compliance

EU RoHS

Fulfills EU RoHS substance requirements	Yes
Exemption	6(b), 6(c)

China RoHS

Environment friendly use period (EFUP)	EFUP-50
	An article-related China RoHS declaration table can be found in the download area for the respective article under "Manufacturer declaration". For all articles with EFUP-E, no China RoHS declaration table issued and required.

EU REACH SVHC

REACH candidate substance (CAS No.)	Lead(CAS: 7439-92-1)
SCIP	8b179ce2-9487-41bb-87ee-8ad2f4a06863

Phoenix Contact 2026 © - all rights reserved
https://www.phoenixcontact.com

Phoenix Contact USA
586 Fulling Mill Road
Middletown, PA 17057, United States
(+717) 944-1300
info@phoenixcon.com