RF-12S2N8A90DU - Coupler connector

1607302

https://www.phoenixcontact.com/us/products/1607302

Please be informed that the data shown in this PDF document is generated from our online catalog. Please find the complete data in the user documentation. Our general terms of use for downloads are valid.

CRIMP



The figure shows the product version with standard contact chamber numbering

Coupler connector, application: Feedback, signal, straight, Screw locking mechanism, M23, number of positions: 12, contact connection type: Socket, shielded: yes, degree of protection: IP67, cable diameter range: 5 mm ... 13.2 mm, number of positions: 12, connection method: Crimp connection, series: RF, Item is lead-free in accordance with RoHS II without Exemption 6c (Pb < 0.1 %), This product is in the process of being discontinued. This product must no longer be considered for new projects. Please contact your sales representative for alternatives.

Commercial data

Item number	1607302
Packing unit	20 pc
Minimum order quantity	1 pc
Note	Made to order (non-returnable)
Sales key	AB31
Product key	ABRAGG
GTIN	4046356174701
Weight per piece (including packing)	101.9 g
Weight per piece (excluding packing)	93.697 g
Customs tariff number	85366990
Country of origin	DE

Technical data

Notes

Order information:	Order crimp contacts Ø 1 mm separately

Product properties

Product type	Circular connector (cable-side)
Series	RF
Application	Feedback, signal
	Signal
Number of positions	12
Connection profile	12
Shielded	yes
Coding	N
Thread type	M23

Material specifications

Material Housing	GD-Zn
Material Rotating parts	CuZn
Material Housing surface	Ni
Material Insulating body	PA 6.6
Material Seal	FPM (O-ring)

Connection data

Conductor connection

Connection method	Crimp connection

Electrical properties

Contact

Contact diameter	1 mm
Nominal current I_N	8 A
Nominal voltage U_N	48 V AC
	74 V DC
Overvoltage category	III
Degree of pollution	3
Rated surge voltage	1.5 kV

Connector

Type	straight
Direction of rotation	Counter direction

Cable/line

External cable diameter	5 mm ... 13.2 mm

Environmental and real-life conditions

Ambient conditions

Degree of protection	IP67
Ambient temperature (operation)	-20 °C ... 125 °C
Altitude	2000 m

Drawings

Dimensional drawing

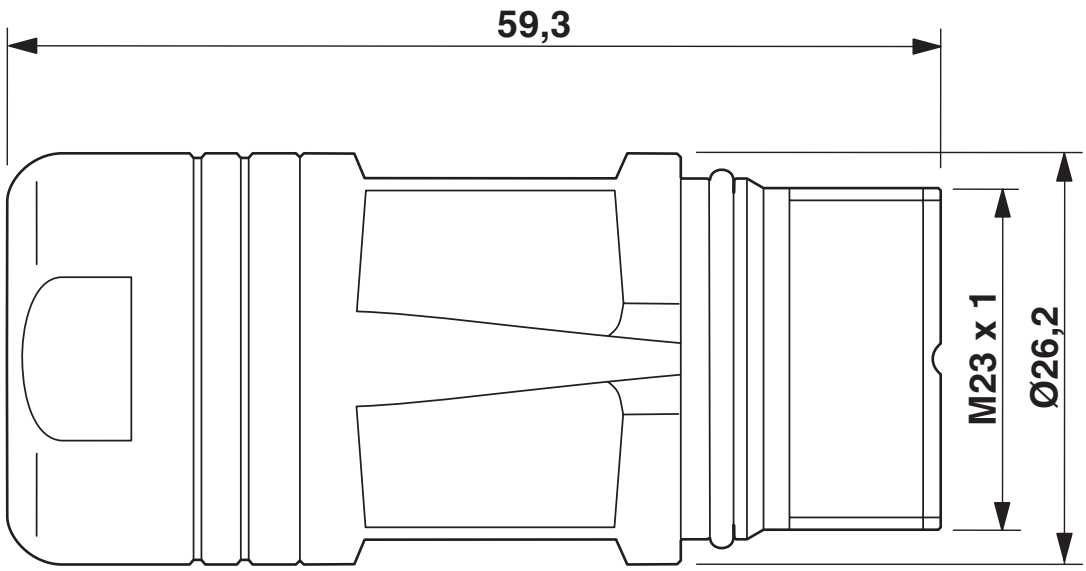

RF-12(17)...N8A90DU

Dimensional drawing

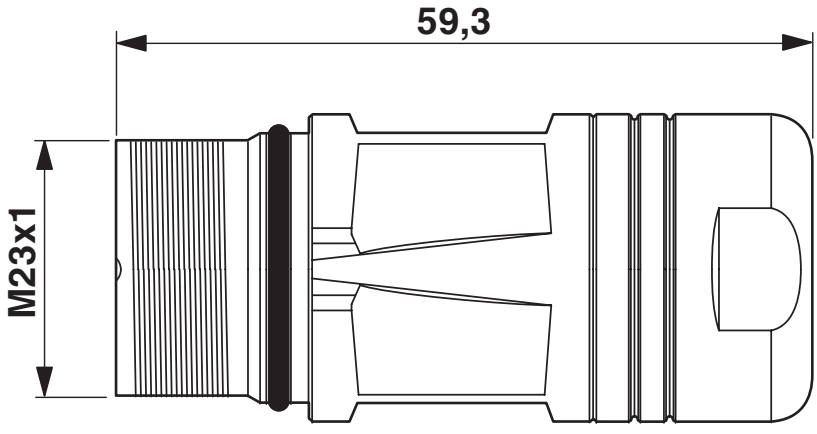

Dimensional drawing

Schematic diagram

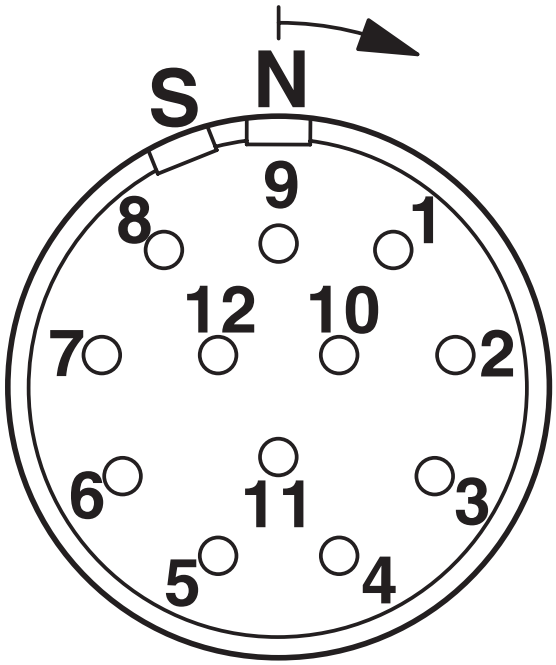

Connector pin assignment

Approvals

To download certificates, visit the product detail page: https://www.phoenixcontact.com/us/products/1607302

cUL Recognized
Approval ID: E153698-20090723

	Nominal voltage U_N	Nominal current I_N	Cross section AWG	Cross section mm^2
keine				
	48 V	5 A	20	-

UL Recognized
Approval ID: E153698-20090723

	Nominal voltage U_N	Nominal current I_N	Cross section AWG	Cross section mm^2
keine				
	48 V	5 A	20	-

Classifications

ECLASS

ECLASS-13.0	27440116
ECLASS-15.0	27440116

ETIM

ETIM 10.0	EC002635

UNSPSC

UNSPSC 21.0	39121400

Environmental product compliance

EU RoHS

Fulfills EU RoHS substance requirements	Yes, No exemptions

China RoHS

Environment friendly use period (EFUP)	EFUP-E
	No hazardous substances above the limits

EU REACH SVHC

REACH candidate substance (CAS No.)	No substance above 0.1 wt%

Phoenix Contact 2026 © - all rights reserved
https://www.phoenixcontact.com

Phoenix Contact USA
586 Fulling Mill Road
Middletown, PA 17057, United States
(+717) 944-1300
info@phoenixcon.com