HC-B-PES - Screw

1604997

https://www.phoenixcontact.com/us/products/1604997

Please be informed that the data shown in this PDF document is generated from our online catalog. Please find the complete data in the user documentation. Our general terms of use for downloads are valid.



PE screw, for contact inserts HC-B / HC-BB / HC-DD / HC-D40 / HC-D64

Commercial data

Item number	1604997
Packing unit	10 pc
Minimum order quantity	1 pc
Sales key	BF61
Product key	AF7ABZ
GTIN	4017918893354
Weight per piece (including packing)	2.1 g
Weight per piece (excluding packing)	2 g
Customs tariff number	73181558
Country of origin	CN

Technical data

Notes

General	PE screw, for contact inserts HC-B / HC-BB / HC-DD / HC-D40 / HC-D64, M4

Product properties

Product type	Mounting material
Type	PE screw

Connection data

Screw thread	M4

Material specifications

Material	Steel, galvanized

Drawings

Dimensional drawing

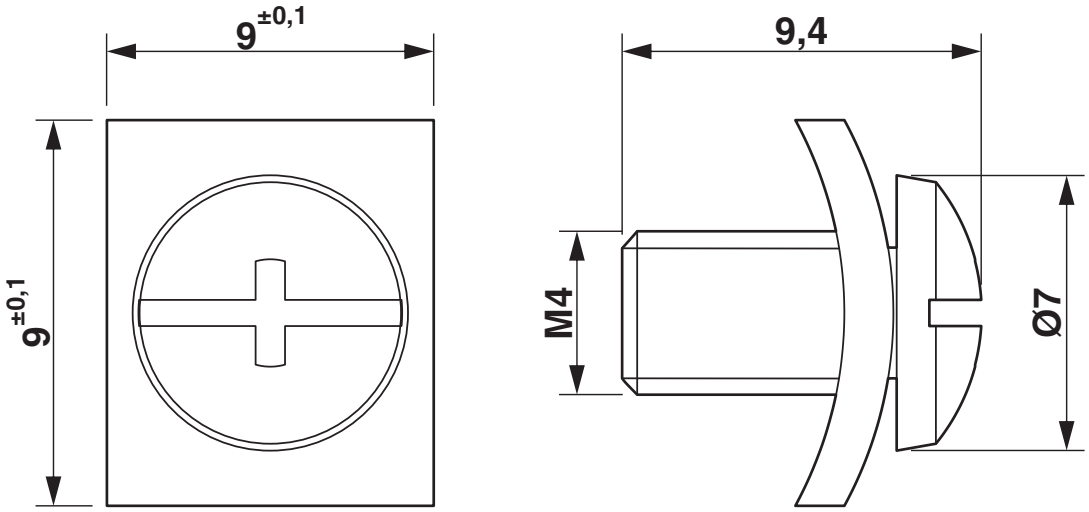

Dimensional drawing

Classifications

ECLASS

ECLASS-15.0	27144492
ECLASS-13.0	27144492

ETIM

ETIM 10.0	EC002610

UNSPSC

UNSPSC 21.0	31161500

Environmental product compliance

EU RoHS

Fulfills EU RoHS substance requirements	Yes, No exemptions

China RoHS

Environment friendly use period (EFUP)	EFUP-E
	No hazardous substances above the limits

EU REACH SVHC

REACH candidate substance (CAS No.)	No substance above 0.1 wt%

EF3.1 Climate Change

CO2e kg	0.02 kg CO2e

Phoenix Contact 2026 © - all rights reserved
https://www.phoenixcontact.com

Phoenix Contact USA
586 Fulling Mill Road
Middletown, PA 17057, United States
(+717) 944-1300
info@phoenixcon.com