RC-Z2104 - Metal protective cap

1604260

https://www.phoenixcontact.com/us/products/1604260

Please be informed that the data shown in this PDF document is generated from our online catalog. Please find the complete data in the user documentation. Our general terms of use for downloads are valid.



Metal protective cap, M23, series: RC, UC, RF, SF, NC, RM, Item is lead-free in accordance with RoHS II without Exemption 6c (Pb < 0.1 %)

Commercial data

Item number	1604260
Packing unit	10 pc
Minimum order quantity	1 pc
Sales key	AB36
Product key	ABRGAB
GTIN	4046356248334
Weight per piece (including packing)	12.37 g
Weight per piece (excluding packing)	12.27 g
Customs tariff number	74198090
Country of origin	DE

Technical data

Product properties

Product type	Protective cap
Series	RC
	UC
	RF
	SF
	NC
	RM

Material specifications

Material Housing	Metal

Environmental and real-life conditions

Ambient conditions

Degree of protection	IP67

Drawings

Dimensional drawing

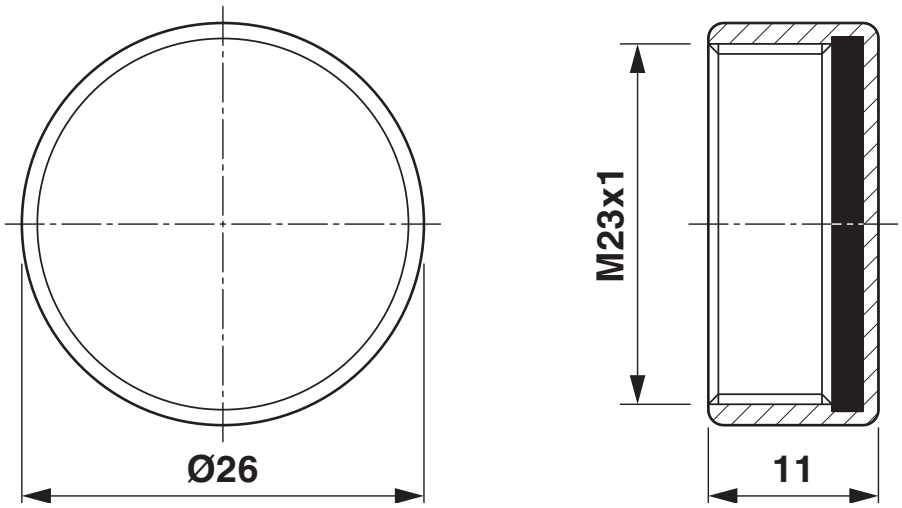

Dimensional drawing

Classifications

ECLASS

ECLASS-13.0	27440208
ECLASS-15.0	27440208

ETIM

ETIM 10.0	EC002314

UNSPSC

UNSPSC 21.0	39121400

Environmental product compliance

EU RoHS

Fulfills EU RoHS substance requirements	Yes, No exemptions

China RoHS

Environment friendly use period (EFUP)	EFUP-E
	No hazardous substances above the limits

EU REACH SVHC

REACH candidate substance (CAS No.)	No substance above 0.1 wt%

Phoenix Contact 2026 © - all rights reserved
https://www.phoenixcontact.com

Phoenix Contact USA
586 Fulling Mill Road
Middletown, PA 17057, United States
(+717) 944-1300
info@phoenixcon.com