HC-D 15-I-CT-F - Contact insert

1584389

https://www.phoenixcontact.com/us/products/1584389

Please be informed that the data shown in this PDF document is generated from our online catalog. Please find the complete data in the user documentation. Our general terms of use for downloads are valid.



Contact insert, number of positions: 15+PE, size: D15, number of connections per position: 1, Socket, Crimp connection, 250 V, 10 A, 0.14 mm^2 ... 2.5 mm^2

Your advantages

- Can be used in rail vehicles, satisfy DIN EN 45545-2 with requirement sets R22, R23, and R24 in hazard levels HL1, HL2, and HL3.
- Shock and vibration-resistant in accordance with DIN EN 61373

Commercial data

Item number	1584389
Packing unit	1 pc
Minimum order quantity	10 pc
Sales key	BF61
Product key	AF7ABE
GTIN	4046356142649
Weight per piece (including packing)	27.471 g
Weight per piece (excluding packing)	26.5 g
Customs tariff number	85389099
Country of origin	CN

Technical data

Notes

General	For HC-D15 housing, crimp contacts CK1,6-ED (crimp contacts not included in scope of supply)
General	Connectors may be operated only when there is no load/voltage.
General	It is imperative that guide pins (HC-CST) and sockets (HC-CBU) are used to prevent tip collision due to misalignment.

Mounting

Assembly note	To ensure correct use, installation in housing with IP54 protection or better is required

Product properties

Product type	Contact insert with a fixed no. of positions
Series	HC-D
Type	D15
Number of positions	15
Note number of positions	15+PE
Connection profile	15+PE
Number of connections per position	1
Contact material type	turned
	rolled

Insulation characteristics

Overvoltage category	III
Degree of pollution	3

Dimensions

Dimensional drawing	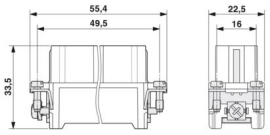
Width	22.5 mm
Height	33.5 mm
Length	55.4 mm
Drill hole distance, horizontal	49.5 mm
Drill hole distance, vertical	16 mm

Mechanical characteristics

Contact diameter	1.6 mm

Connection data

Connection technology

Connection technology	Crimp connection
Number of connections per position	1
Connection in acc. with standard	IEC / EN

Conductor connection

Conductor cross-section	0.14 mm² ... 2.5 mm²
Connection cross section AWG	26 ... 14
Tightening torque	0.7 Nm ... 1 Nm (PE connection)
	0.5 Nm ... 0.8 Nm (Mounting screws for mounting in the HEAVYCON housing)
Stripping length of the individual wire	8 mm (0.14 mm² ... 1.5 mm²)
	6 mm (2.5 mm²)

Electrical properties

Rated voltage (III/3)	250 V
Rated surge voltage	4 kV
Rated current	10 A
SCCR	5 kA (UL 2237)

Mechanical properties

Mechanical data

Insertion/withdrawal cycles	≥ 500

Material specifications

Flammability rating according to UL 94	V0
Contact material	Copper alloy
Contact surface material	Ag (alternatively Au)
Contact carrier material	PC

Environmental and real-life conditions

Ambient conditions

Ambient temperature (operation)	-40 °C ... 125 °C (including heating up of contacts)

Standards and regulations

Constructional and testing regulations	DIN VDE 0627/86
	DIN VDE 0110/02.79
	DIN VDE 0110-1/04.97
	IEC 60664-1, DIN IEC 60512
	IEC 60352
Tests	DIN VDE 0627/86
	DIN VDE 0110/02.79
	DIN VDE 0110-1/04.97
	IEC 60664-1, DIN IEC 60512
	IEC 60352

Standards/regulations	PC: Fire protection in rail vehicles - requirement sets R22, R23, and R24 acc. to DIN EN 45545-2 (Risk level HL1 - HL3)

Drawings

Dimensional drawing

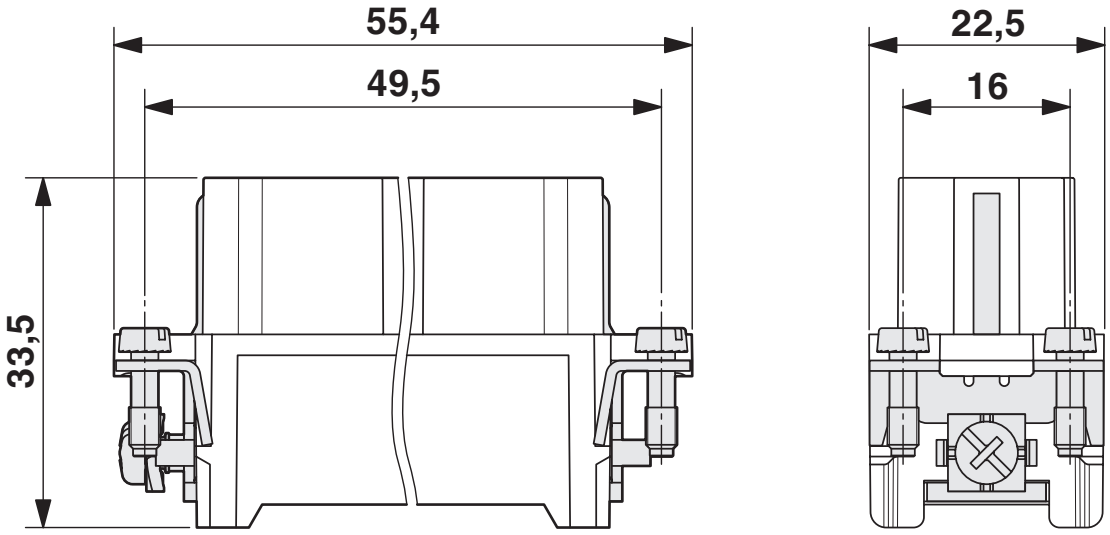

Female insert

Dimensional drawing

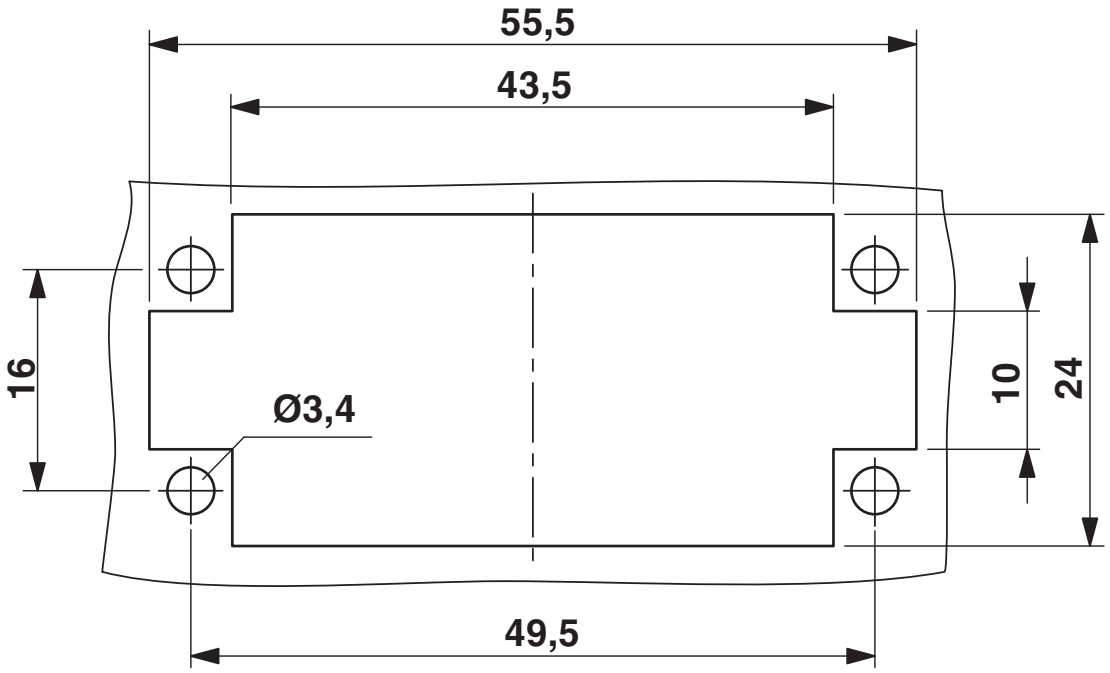

Mounting cutout when used without housing

Schematic diagram

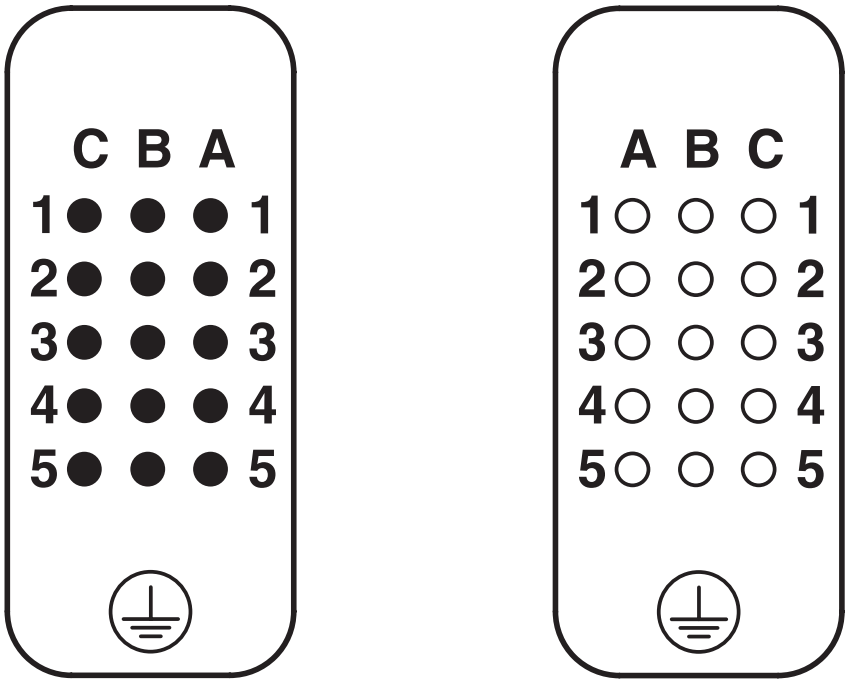

Connector pin assignment connection side: Left pin; right socket

Diagram

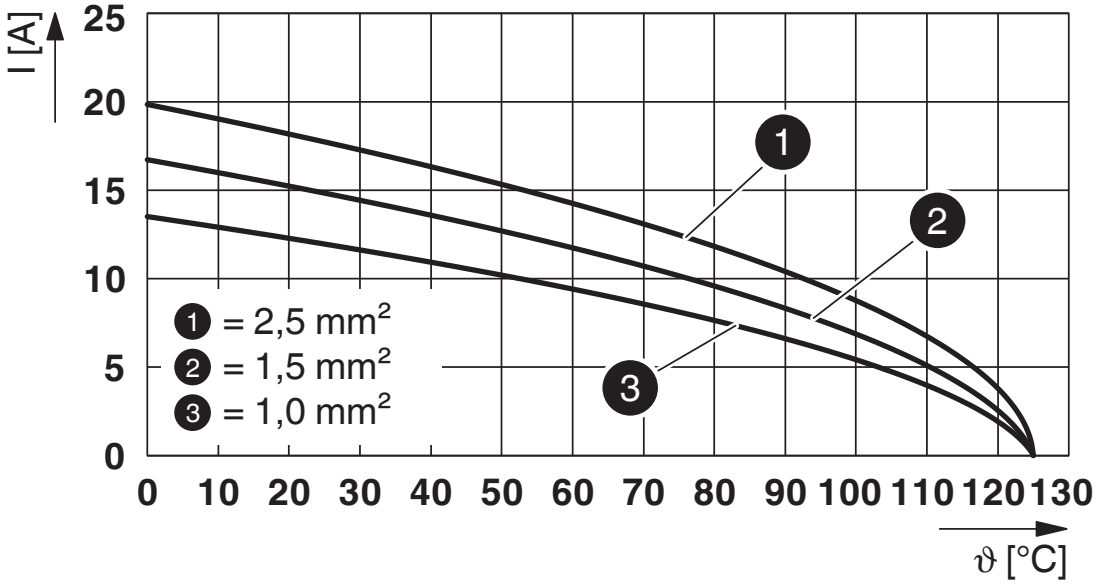

Derating diagram turned contacts

Diagram

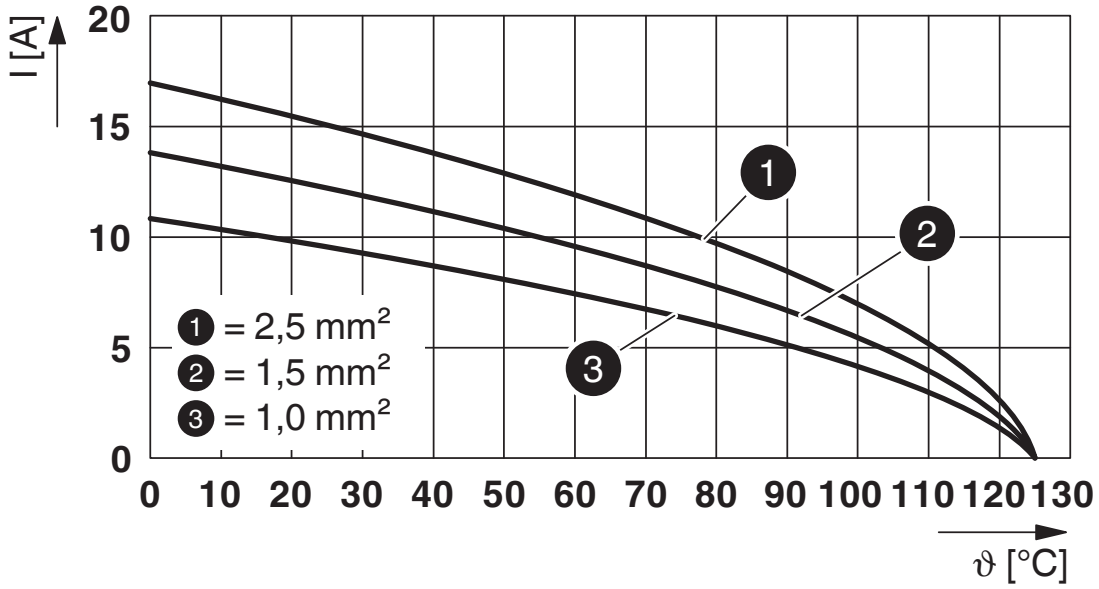

Derating diagram rolled contacts

Approvals

To download certificates, visit the product detail page: https://www.phoenixcontact.com/us/products/1584389

DNV
Approval ID: TAE000037S

CSA
Approval ID: 13631

	Nominal voltage U_N	Nominal current I_N	Cross section AWG	Cross section mm^2
keine				
	600 V	8 A	- 14	-

UL Recognized
Approval ID: E118976

	Nominal voltage U_N	Nominal current I_N	Cross section AWG	Cross section mm^2
keine				
	600 V	10 A	-	-

UL Recognized
Approval ID: E468743

	Nominal voltage U_N	Nominal current I_N	Cross section AWG	Cross section mm^2
keine				
	600 V	10 A	-	-

Classifications

ECLASS

ECLASS-13.0	27440205
ECLASS-15.0	27440205

ETIM

ETIM 10.0	EC000438

UNSPSC

UNSPSC 21.0	39121500

Environmental product compliance

EU RoHS

Fulfills EU RoHS substance requirements	Yes, No exemptions

China RoHS

Environment friendly use period (EFUP)	EFUP-E
	No hazardous substances above the limits

EU REACH SVHC

REACH candidate substance (CAS No.)	No substance above 0.1 wt%

Phoenix Contact 2026 © - all rights reserved
https://www.phoenixcontact.com

Phoenix Contact USA
586 Fulling Mill Road
Middletown, PA 17057, United States
(+717) 944-1300
info@phoenixcon.com