SACC-FS-12PCON SCO - Connector

1559631

https://www.phoenixcontact.com/us/products/1559631

Please be informed that the data shown in this PDF document is generated from our online catalog. Please find the complete data in the user documentation. Our general terms of use for downloads are valid.



Connector, Universal, 12-position, Socket straight M12 SPEEDCON, coding: A, Piercecon® fast connection, knurl material: Zinc die-cast, nickel-plated, external cable diameter 5.4 mm ... 8.2 mm

Your advantages

- Safe use in the field, thanks to a high degree of protection
- Save time, thanks to installation with SPEEDCON fast locking system
- Piercecon® connection: maximum contact density in a connector that can be assembled
- Save space – with high-pos. connectors

Commercial data

Item number	1559631
Packing unit	1 pc
Minimum order quantity	1 pc
Sales key	BF32
Product key	AF2CGA
GTIN	4046356314848
Weight per piece (including packing)	36.8 g
Weight per piece (excluding packing)	35 g
Customs tariff number	85366990
Country of origin	DE

Technical data

Notes

Assembly note	NOTE: Observe the permissible bending radii when routing cables, since the degree of protection may be at risk if the bending forces are too high. Reduce mechanical loads upstream of the connector, e.g., by using cable ties.

Product properties

Product type	Circular connector (cable-side)
Number of positions	12
No. of cable outlets	1
Shielded	no
Coding	A
Cable outlet	straight

Insulation characteristics

Overvoltage category	II
Degree of pollution	3

Dimensions

Dimensional drawing	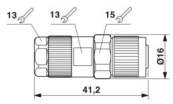
Length	41.2 mm
Wrench size, union nut	13 mm
Wrench size, counter nut	15 mm

External dimensions

Outside diameter	5.4 mm ... 8.2 mm

Housing

Diameter housing	16 mm

Material specifications

Flammability rating according to UL 94	V0
Seal material	FKM
Material of grip body	Zinc die-cast, nickel-plated
Contact material	CuZn
Contact surface material	Ni/Au
Contact carrier material	PA
Material for screw connection	Zinc die-cast, nickel-plated

Wire insulation material	PUR / PVC

Connection data

Conductor connection

Connection method	Piercecon® fast connection
Connection cross section	0.14 mm² ... 0.14 mm² (without ferrule)
Connection cross section AWG	26 ... 26 (without ferrule)
Tightening torque	0.4 Nm (M12 knurl)

Connection assignment

Contact | Color (signal designation) | Contact (optional)	1 = BN
	2 = BU
	3 = WH
	4 = GN
	5 = PK
	6 = YE
	7 = BK
	8 = GY
	9 = RD
	10 = VT
	11 = GYPK
	12 = RDBU

Electrical properties

Rated surge voltage	0.8 kV
Insulation resistance	≥ 100 MΩ
Nominal voltage U_N	30 V AC
	30 V DC
Nominal current I_N	1.5 A

Mechanical properties

Mechanical data

Insertion/withdrawal cycles	≥ 100

Connector

Connection 1

Head design	Socket
Head cable outlet	straight
Head thread type	M12
Head locking type	SPEEDCON
Coding	A

Interfaces

Signal type/category	Universal

Environmental and real-life conditions

Ambient conditions

Degree of protection	IP67
Ambient temperature (operation) (male connector/female connector)	-25 °C ... 85 °C (Plug / socket)

Standards and regulations

M12

Standard designation	M12 connector
Standards/specifications	IEC 61076-2-101

Drawings

Dimensional drawing

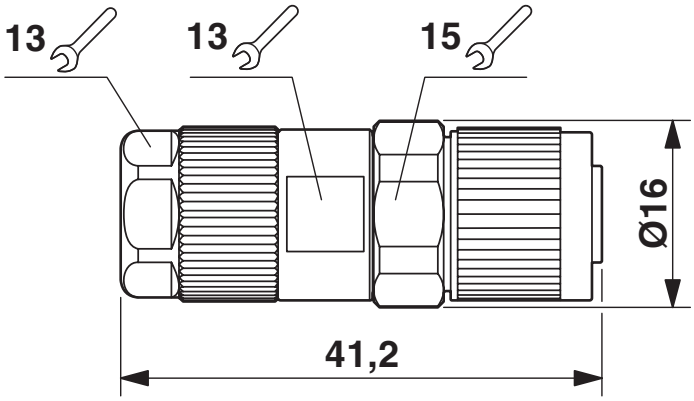

M12 x 1 socket, straight

Schematic diagram

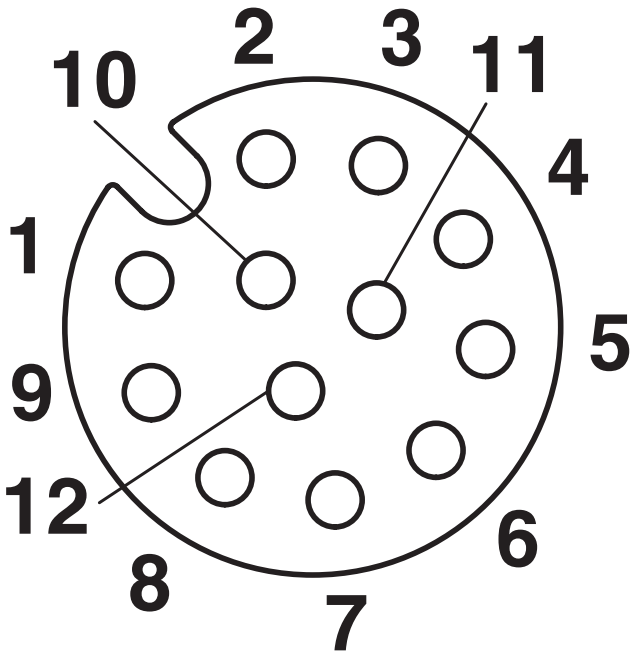

Pin assignment M12, 12-pos., female side view

Classifications

ECLASS

ECLASS-13.0	27440116
ECLASS-15.0	27440116

ETIM

ETIM 10.0	EC002635

UNSPSC

UNSPSC 21.0	39121400

Environmental product compliance

EU RoHS

Fulfills EU RoHS substance requirements	Yes, No exemptions

China RoHS

Environment friendly use period (EFUP)	EFUP-E
	No hazardous substances above the limits

EU REACH SVHC

REACH candidate substance (CAS No.)	No substance above 0.1 wt%

Phoenix Contact 2026 © - all rights reserved
https://www.phoenixcontact.com

Phoenix Contact USA
586 Fulling Mill Road
Middletown, PA 17057, United States
(+717) 944-1300
info@phoenixcon.com