PROT-MS SCO - Screw plug

1553129

https://www.phoenixcontact.com/us/products/1553129

Please be informed that the data shown in this PDF document is generated from our online catalog. Please find the complete data in the user documentation. Our general terms of use for downloads are valid.



M12 screw plug with fast-locking system for unoccupied M12 female connectors of sensor/actuator cables, boxes, and flush-type connectors

Your advantages

- Reliable protection of unoccupied slots during transport and use in the field
- Protected against splash water and dust
- Easy assembly by hand or using a screwdriver
- Good haptics due to ribbing
- Secure and convenient locking with SPEEDCON

Commercial data

Item number	1553129
Packing unit	5 pc
Minimum order quantity	5 pc
Sales key	BF46
Product key	AF3ZAX
GTIN	4046356156776
Weight per piece (including packing)	1.79 g
Weight per piece (excluding packing)	1.6 g
Customs tariff number	39269097
Country of origin	DE

Technical data

Notes

General	Not suitable for M12 sockets with K, L, or M coding

Product properties

Product type	Plug for cable screw gland
Thread type	M12

Dimensions

Dimensional drawing	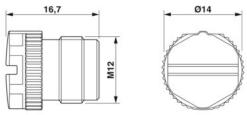
Diameter	14 mm

Material specifications

Flammability rating according to UL 94	V0
Material for screw connection	PA 6.6

Environmental and real-life conditions

Ambient conditions

Degree of protection	IP67

Drawings

Dimensional drawing

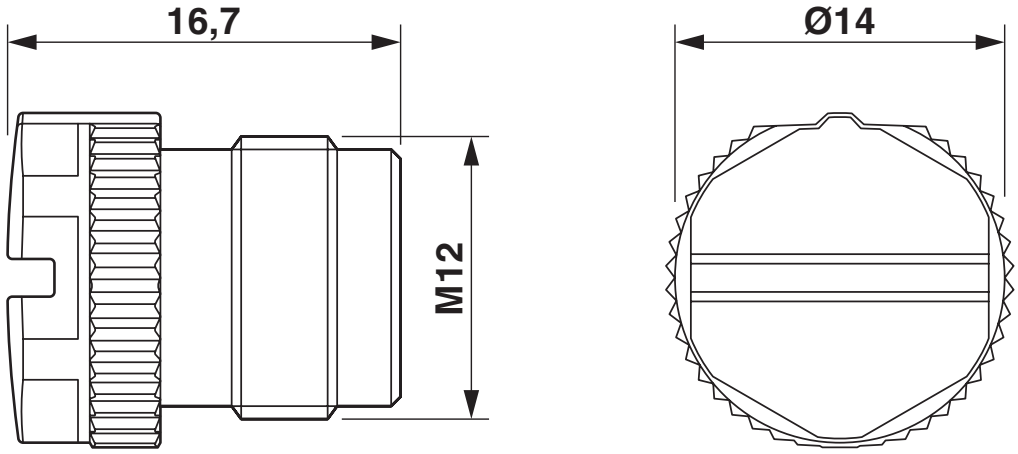

Classifications

ECLASS

ECLASS-13.0	23111190
ECLASS-15.0	27440208

ETIM

ETIM 10.0	EC002314

UNSPSC

UNSPSC 21.0	31261500

Environmental product compliance

EU RoHS

Fulfills EU RoHS substance requirements	Yes, No exemptions

China RoHS

Environment friendly use period (EFUP)	EFUP-E
	No hazardous substances above the limits

EU REACH SVHC

REACH candidate substance (CAS No.)	No substance above 0.1 wt%

EF3.1 Climate Change

CO2e kg	0.019 kg CO2e

Phoenix Contact 2026 © - all rights reserved
https://www.phoenixcontact.com

Phoenix Contact USA
586 Fulling Mill Road
Middletown, PA 17057, United States
(+717) 944-1300
info@phoenixcon.com