SAC-6P-M 8MR/ 1,5-PUR SH - Sensor/actuator cable

1522341

https://www.phoenixcontact.com/us/products/1522341

Please be informed that the data shown in this PDF document is generated from our online catalog. Please find the complete data in the user documentation. Our general terms of use for downloads are valid.

Sensor/actuator cable, 6-position, PUR halogen-free, black-gray RAL 7021, shielded, Plug angled M8, coding: A, on free cable end, cable length: 1.5 m

Your advantages

- Easy and safe: 100 % electrically tested plug-in components
- Reliable signal transmission – 360° shielding in environments with electromagnetic interference

Commercial data

Item number	1522341
Packing unit	1 pc
Minimum order quantity	1 pc
Sales key	BF01
Product key	AF1BNA
GTIN	4046356021104
Weight per piece (including packing)	66.1 g
Weight per piece (excluding packing)	63.7 g
Customs tariff number	85444290
Country of origin	PL

Technical data

Product properties

Product type	Sensor/actuator cable
Application	Standard
Number of positions	6
No. of cable outlets	1
Shielded	yes
Coding	A

Insulation characteristics

Overvoltage category	II
Degree of pollution	3

Material specifications

Flammability rating according to UL 94	HB
Material of grip body	TPU, hardly inflammable, self-extinguishing
Contact material	CuZn
Contact surface material	Ni/Au
Contact carrier material	TPU GF
Material for screw connection	Zinc die-cast, nickel-plated

Electrical properties

Rated voltage in acc. with IEC 61076-2-101	30 V
Insulation resistance	≥ 100 MΩ
Nominal voltage U_N	30 V AC
	30 V DC
Nominal current I_N	1.5 A

Mechanical properties

Mechanical data

Insertion/withdrawal cycles	≥ 100

Signaling

Status display	no
Status display present	no

Connection data

Conductor connection

Tightening torque	0.2 Nm (M8 connectors)

Connector

Connection 1

Type	Plug angled M8
Number of positions	6
Coding type	A

Connection 2

Type	free cable end

Cable/line

Cable length	1.5 m

PUR halogen-free black [PUR]

Dimensional drawing	
Cable weight	34 kg/km
Number of positions	6
Shielded	yes
Cable type	PUR halogen-free black [PUR]
Conductor structure signal line	18x 0.10 mm
AWG signal line	26
Conductor cross-section	6x 0.14 mm² (Signal line)
Wire diameter incl. insulation	1 mm ±0.05 mm
External cable diameter	5.2 mm
	5.20 mm
Outer sheath, material	PUR
External sheath, color	black-gray RAL 7021
Conductor material	Bare Cu litz wires
Single wire, color	brown, white, black, blue, gray, pink
Smallest bending radius, fixed installation	52 mm
Smallest bending radius, movable installation	52 mm
Dynamic load capacity (bending)	Max. bending cycles: 10000000, Bending radius: 52 mm, Traversing path: 10 m, Traversing rate: 3 m/s, Acceleration: 10 m/s²
Dynamic load capacity (torsion)	Torsion: ±180 °/m, Torsion cycles: ≥5000000, Torsional frequency: 35 cycles/min.
Halogen-free	in accordance with DIN VDE 0472 part 815
Flame resistance	in accordance with DIN UL-Style 20549
Resistance to oil	in accordance with DIN EN 60811-2-1
Other resistance	Highly resistant to acids, alkaline solutions and solvents
	hydrolysis and microbe resistant
	partly UV-resistant (in accordance with DIN EN ISO 4892-2-A)

Special properties	Flexible cable conduit capable
	Silicone-free
	Free of substances which would hinder coating with paint or varnish
Ambient temperature (operation)	-40 °C ... 80 °C (cable, fixed installation)
	-5 °C ... 80 °C (Cable, flexible installation)

Environmental and real-life conditions

Ambient conditions

Degree of protection	IP65
	IP67
Ambient temperature (operation) (male connector/female connector)	-25 °C ... 90 °C (Plug / socket)
Ambient temperature (operation) (Cable, fixed installation)	-25 °C ... 80 °C (cable, fixed installation)
Ambient temperature (operation) (Cable, flexible installation)	-5 °C ... 80 °C (Cable, flexible installation)

Standards and regulations

Standard designation	M8 connector
Standards/specifications	IEC 61076-2-104

Drawings

Dimensional drawing

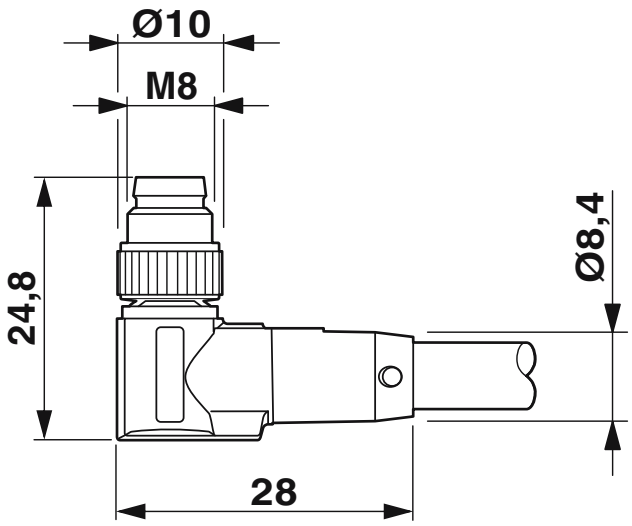

Plug M8 x 1, angled, shielded

Schematic diagram

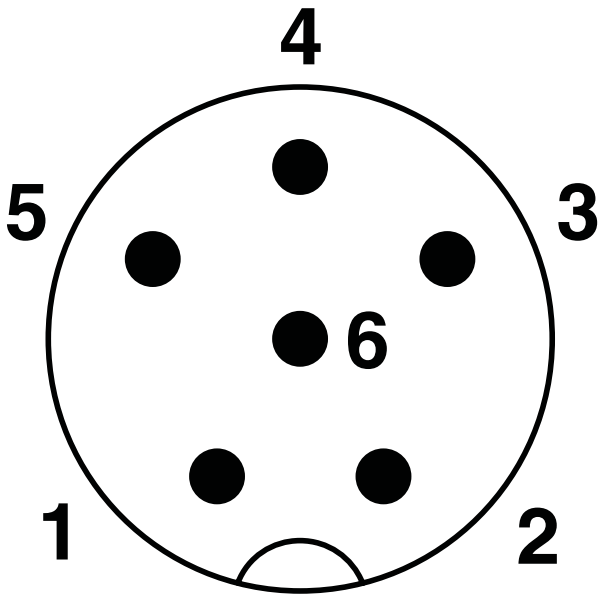

Pin assignment M8 plug, 6-pos., view male side

Schematic diagram

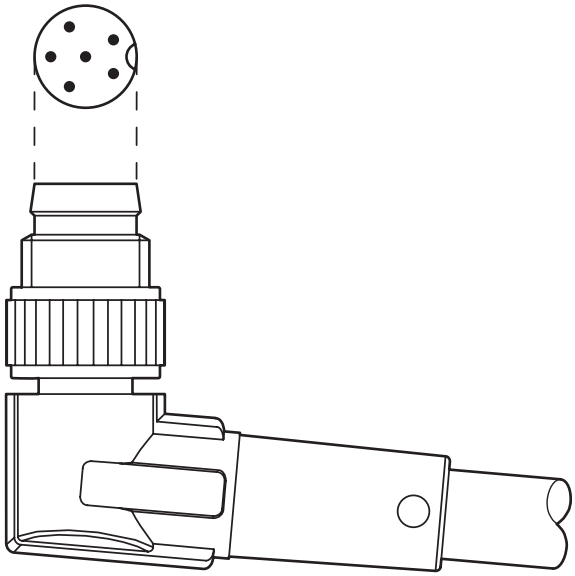

Layout of connector pin assignments

Circuit diagram

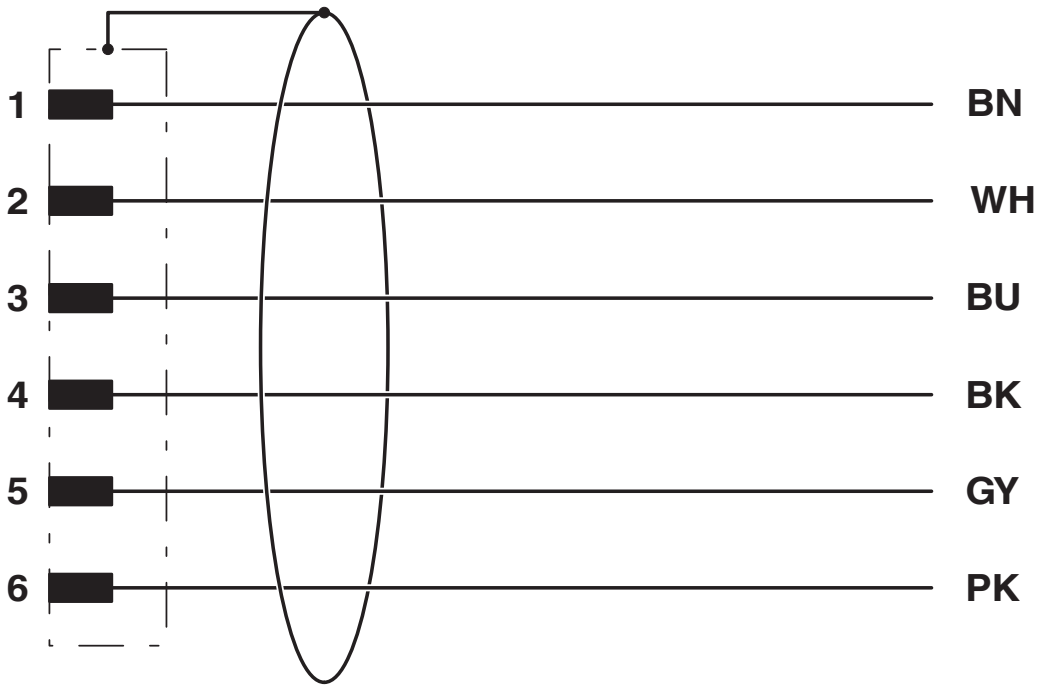

Contact assignment of the M8 plug

Approvals

To download certificates, visit the product detail page: https://www.phoenixcontact.com/us/products/1522341

UL Listed
Approval ID: FILE E 221474

	Nominal voltage U_N	Nominal current I_N	Cross section AWG	Cross section mm^2
keine				
	30 V	1.5 A	-	-

cUL Listed
Approval ID: FILE E 221474

	Nominal voltage U_N	Nominal current I_N	Cross section AWG	Cross section mm^2
keine				
	30 V	1.5 A	-	-

EAC-RoHS
Approval ID: RU D-DE.HB35.B.00387

Classifications

ECLASS

ECLASS-13.0	27060311
ECLASS-15.0	27060311

ETIM

ETIM 10.0	EC001855

UNSPSC

UNSPSC 21.0	26121600

Environmental product compliance

EU RoHS

Fulfills EU RoHS substance requirements	Yes, No exemptions

China RoHS

Environment friendly use period (EFUP)	EFUP-E
	No hazardous substances above the limits

EU REACH SVHC

REACH candidate substance (CAS No.)	No substance above 0.1 wt%

EF3.1 Climate Change

CO2e kg	4.924 kg CO2e

Phoenix Contact 2026 © - all rights reserved
https://www.phoenixcontact.com

Phoenix Contact USA
586 Fulling Mill Road
Middletown, PA 17057, United States
(+717) 944-1300
info@phoenixcon.com