SACB-8/16-L-C SCO - Distributor box

1516836

https://www.phoenixcontact.com/us/products/1516836

Please be informed that the data shown in this PDF document is generated from our online catalog. Please find the complete data in the user documentation. Our general terms of use for downloads are valid.



Distributor box, application: Standard, extended requirements, connection method: M12 socket Metal, number of slots: 8, number of positions: 5, coding: A, slot assignment: Double, status display: yes, PNP; master cable connection: Pluggable screw connection 180°, shielding: no

Your advantages

- Safety in the field, thanks to molded housing and high degree of protection
- Convenient: increased machine availability thanks to quick and easy diagnostics
- Save space: distributor box with double occupancy for two sensors in one slot
- Save time, thanks to installation with SPEEDCON fast locking system
- Flexible: distributor box with connector hood for on-site assembly

Commercial data

Item number	1516836
Packing unit	1 pc
Minimum order quantity	1 pc
Sales key	BF42
Product key	AF3CCD
GTIN	4017918967567
Weight per piece (including packing)	371.1 g
Weight per piece (excluding packing)	326.13 g
Customs tariff number	85366990
Country of origin	DE

Technical data

Notes

Note regarding documentation	For details about the PCB connectors used, refer to the technical data for MC 1,5/10-STF-3,5 (1847204)
Assembly note	NOTE: Observe the permissible bending radii when routing cables, since the degree of protection may be at risk if the bending forces are too high. Reduce mechanical loads upstream of the connector, e.g., by using cable ties.
Note on application	Unused slots are to be sealed off prior to commissioning. Suitable sealing elements are to be found under "Accessories".

Product properties

Product type	Distributor box
Application	Standard, extended requirements
Number of positions	5
Number of slots	8
Coding	A
LED	yes

System properties

Local diagnostics

Monitored function	Supply voltage per module
Optical representation	Green LED

Electrical properties

Max. operating voltage U_{max}	30 V DC
Local diagnostics	Supply voltage per module Green LED
	Status display I/O Yellow LED
Nominal voltage U_N	24 V DC
Rated current, total	10 A
	2x 8 A (For electrical isolation)
Max. current carrying capacity per path	2 A
Current carrying capacity per slot	4 A

Connection data

Conductor connection

Sensor/actuator connection system	M12 socket
Conductor cross-section Flexible signal line	0.14 mm² ... 1.5 mm²
Conductor cross-section Flexible power supply	0.14 mm² ... 1.5 mm²
Connection cross section AWG Flexible signal line	26 ... 16
Connection cross section AWG Flexible power supply	26 ... 16
Stripping length Signal line	7 mm
Stripping length of the sheath	50 mm (Master cable)

Tightening torque, cover screw	0.35 Nm
Tightening torque slot sensor/actuator cable	0.4 Nm
Tightening torque of mounting screw for fixing the housing	0.5 Nm
Tightening torque, union nut	2.5 Nm

Connection assignment

Slot/position = Wire color or connection	1 / 4 (A) = 1 / 4
	1 / 2 (B) = 1 / 2
	2 / 4 (A) = 2 / 4
	2 / 2 (B) = 2 / 2
	3 / 4 (A) = 3 / 4
	3 / 2 (B) = 3 / 2
	4 / 4 (A) = 4 / 4
	4 / 2 (B) = 4 / 2
	5 / 4 (A) = 5 / 4
	5 / 2 (B) = 5 / 2
	6 / 4 (A) = 6 / 4
	6 / 2 (B) = 6 / 2
	7 / 4 (A) = 7 / 4
	7 / 2 (B) = 7 / 2
	8 / 4 (A) = 8 / 4
	8 / 2 (B) = 8 / 2
	1-8 / 1 (+ 24 V) = U_N
	1-8 / 3 (0 V) = 0 V
	1-8 / 5 (PE) = PE

Signaling

Status display present	yes

Dimensions

Dimensional drawing	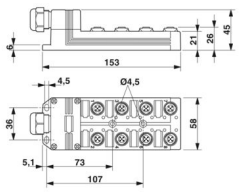
Width	58 mm
Height	45 mm
Length	153 mm

Material specifications

Material Threaded sleeve	Die-cast zinc
Material Housing	PBT
Material Molding compound	PUR

Flammability rating according to UL 94	V0
Seal material	NBR
Contact material	Cu alloy
Contact surface material	gold-plated
Contact carrier material	PA
Material of contact, master cable side	CU alloy
Material of the contact carrier on the master cable side	PA 6.6 V0
Material of contact surface, master cable side	gold-plated

Cable/line

External cable diameter	7 mm ... 12 mm
Connection method	Pluggable screw connection

Environmental and real-life conditions

Ambient conditions

Degree of protection	IP65
	IP67
	IP69K
Ambient temperature (operation)	-30 °C ... 80 °C

Standards and regulations

Standard designation	M12 connector
Standards/specifications	IEC 61076-2-101

Drawings

Dimensional drawing

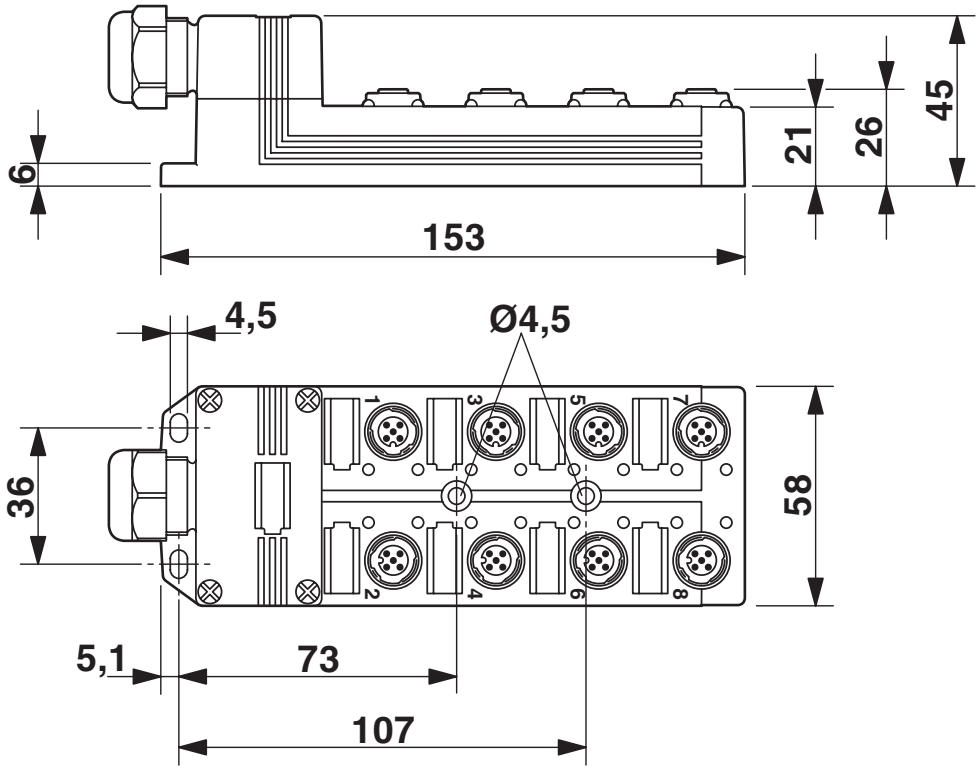

Schematic diagram

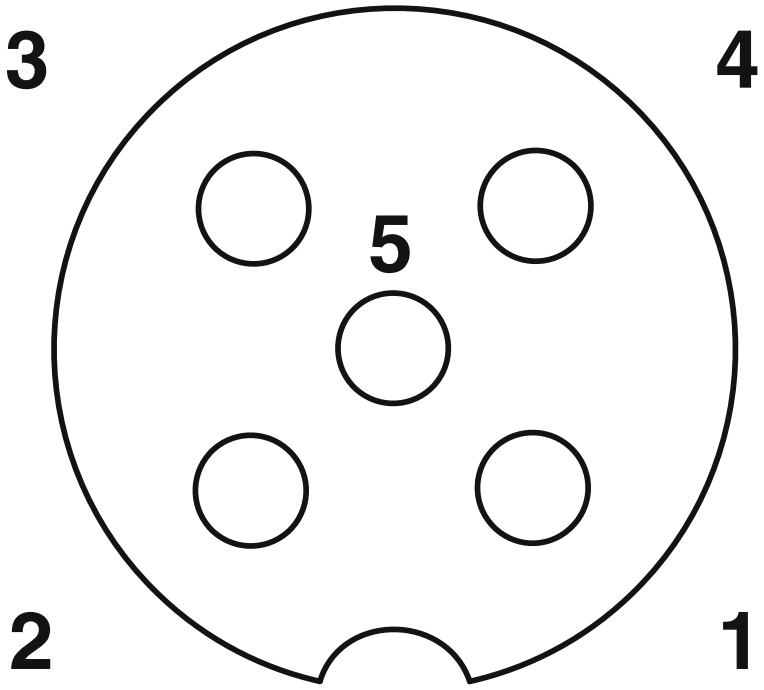

M12 slot, socket, 5-pos.

Schematic diagram

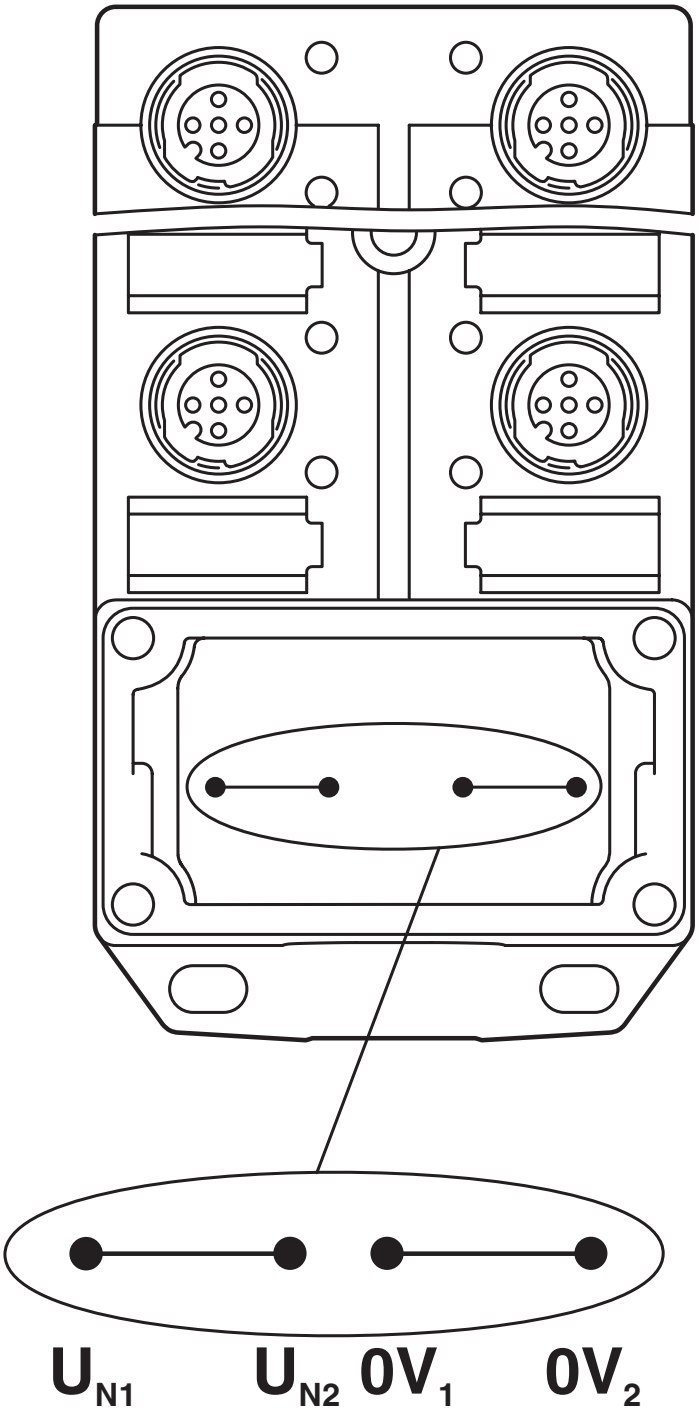

Potential U_{N1} and U_{N2} bridged. Potential assignment: U_{N1} = U_{N2} = slots 1,2,3,4,5,6,7,8.

Schematic diagram

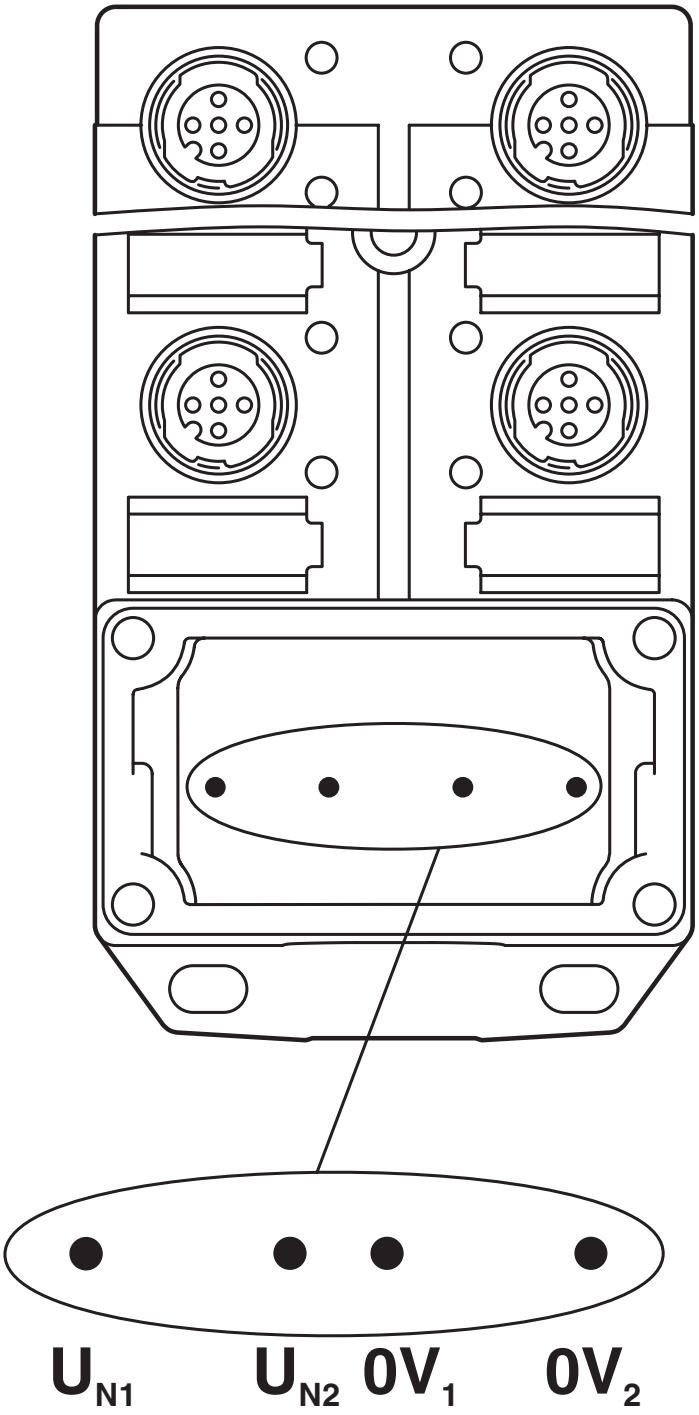

Electrically isolated. Potential assignment: U_{N1} = slots 1,3,5,7 and U_{N2} = slots 2,4,6,8.

Circuit diagram

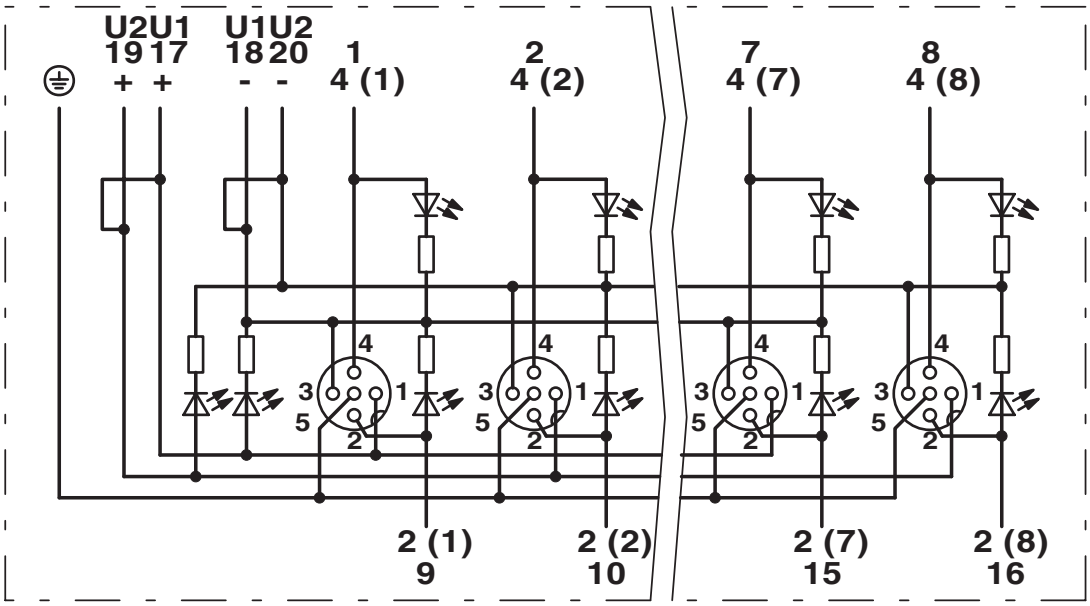

Approvals

To download certificates, visit the product detail page: https://www.phoenixcontact.com/us/products/1516836

cUL Recognized
Approval ID: E118976

	Nominal voltage U_N	Nominal current I_N	Cross section AWG	Cross section mm^2
keine				
	24 V	3 A	-	-

UL Recognized
Approval ID: E118976

	Nominal voltage U_N	Nominal current I_N	Cross section AWG	Cross section mm^2
keine				
	24 V	3 A	-	-

Classifications

ECLASS

ECLASS-13.0	27440111
ECLASS-15.0	27440111

ETIM

ETIM 10.0	EC003558

UNSPSC

UNSPSC 21.0	31251500

Environmental product compliance

EU RoHS

Fulfills EU RoHS substance requirements	Yes, No exemptions

China RoHS

Environment friendly use period (EFUP)	EFUP-E
	No hazardous substances above the limits

EU REACH SVHC

REACH candidate substance (CAS No.)	No substance above 0.1 wt%

Phoenix Contact 2026 © - all rights reserved
https://www.phoenixcontact.com

Phoenix Contact USA
586 Fulling Mill Road
Middletown, PA 17057, United States
(+717) 944-1300
info@phoenixcon.com