SACC-E-MU-M16 - Flat nut

1504097

https://www.phoenixcontact.com/us/products/1504097

Please be informed that the data shown in this PDF document is generated from our online catalog. Please find the complete data in the user documentation. Our general terms of use for downloads are valid.



Flat nut, for threads M16 x 1.5, this item is expected to be lead-free from Q1 2027 in accordance with RoHS II without exception 6c (Pb < 0.1%), a lead-free alternative is possible on request in advance

Commercial data

Item number	1504097
Packing unit	100 pc
Minimum order quantity	1 pc
Sales key	AB27
Product key	ABQZBA
GTIN	4017918833473
Weight per piece (including packing)	2.83 g
Weight per piece (excluding packing)	2.83 g
Customs tariff number	74153300
Country of origin	DE

Technical data

Notes

Order information:	Lock nut is included in the scope of delivery

Product properties

Product type	Flat nut
Thread type	M16

Dimensions

Dimensional drawing	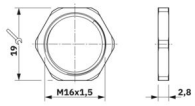
Wrench size, counter nut	19 mm
Thread type connection side	M16 x 1.5
Thread pitch	1.5 mm

Material specifications

Material (Nut)	CuZn/Ni

Drawings

Dimensional drawing

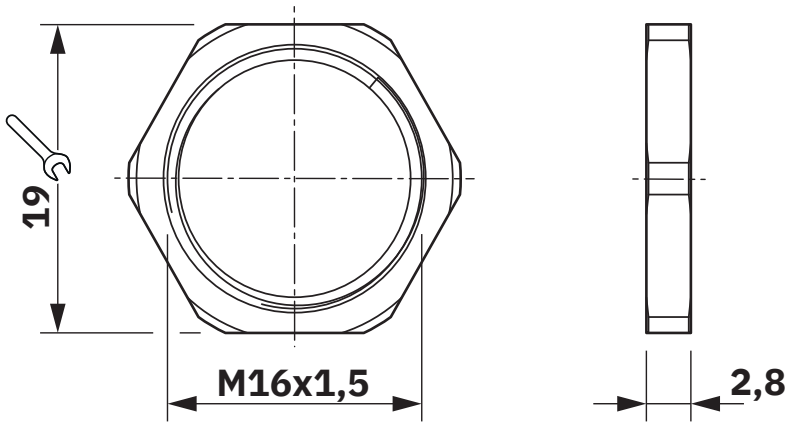

Classifications

ECLASS

ECLASS-13.0	27440210
ECLASS-15.0	27440210

ETIM

ETIM 10.0	EC002310

UNSPSC

UNSPSC 21.0	39121400

Environmental product compliance

EU RoHS

Fulfills EU RoHS substance requirements	Yes
Exemption	6(c)

China RoHS

Environment friendly use period (EFUP)	EFUP-50
	An article-related China RoHS declaration table can be found in the download area for the respective article under "Manufacturer declaration". For all articles with EFUP-E, no China RoHS declaration table issued and required.

EU REACH SVHC

REACH candidate substance (CAS No.)	Lead(CAS: 7439-92-1)
SCIP	831fd90a-87cd-4cdb-9f9b-a408d3239131

Phoenix Contact 2026 © - all rights reserved
https://www.phoenixcontact.com

Phoenix Contact USA
586 Fulling Mill Road
Middletown, PA 17057, United States
(+717) 944-1300
info@phoenixcon.com