SACB-8/16-L-C GG SCO P - Distributor box header

1452916

https://www.phoenixcontact.com/us/products/1452916

Please be informed that the data shown in this PDF document is generated from our online catalog. Please find the complete data in the user documentation. Our general terms of use for downloads are valid.



Distributor box header, application: Standard, connection method: M12 socket Plastic, number of slots: 8, number of positions: 5, coding: A, slot assignment: Double, status display: yes, PNP; master cable connection: Pluggable screw connection, shielding: no

Commercial data

Item number	1452916
Packing unit	1 pc
Minimum order quantity	1 pc
Sales key	BF41
Product key	AF3CBD
GTIN	4046356553773
Weight per piece (including packing)	185 g
Weight per piece (excluding packing)	163.82 g
Customs tariff number	85366990
Country of origin	DE

Technical data

Notes

Assembly note	NOTE: Observe the permissible bending radii when routing cables, since the degree of protection may be at risk if the bending forces are too high. Reduce mechanical loads upstream of the connector, e.g., by using cable ties.
Note on application	Unused slots are to be sealed off prior to commissioning. Suitable sealing elements are to be found under "Accessories".

Product properties

Product type	Header with metric measurement slots
Application	Standard
Number of positions	5
Number of slots	8
Coding	A
LED	yes

System properties

Local diagnostics

Monitored function	Supply voltage
Optical representation	Green LED

Electrical properties

Max. operating voltage U_{max}	30 V DC
Local diagnostics	Supply voltage Green LED
	Status display I/O Yellow LED
Nominal voltage U_N	24 V DC
Rated current, total	10 A
Max. current carrying capacity per path	2 A
Current carrying capacity per slot	4 A

Signaling

Status display present	yes

Dimensions

Dimensional drawing	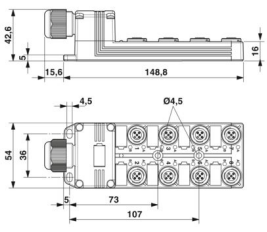

Width	54 mm
Height	19 mm
Length	149 mm

Material specifications

Material Threaded sleeve	PBT
Material Housing	PBT
Material Molding compound	PUR
Flammability rating according to UL 94	V0
Seal material	NBR (Connector hood)
Contact material	Cu alloy
Contact surface material	gold-plated
Contact carrier material	PA
Material of contact, master cable side	CU alloy
Material of the contact carrier on the master cable side	PA
Material of contact surface, master cable side	Sn

Cable/line

Connection method	Pluggable screw connection

Environmental and real-life conditions

Ambient conditions

Degree of protection	IP65
	IP67
Ambient temperature (operation)	-25 °C ... 80 °C

Standards and regulations

Standard designation	M12 connector
Standards/specifications	IEC 61076-2-101

Drawings

Dimensional drawing

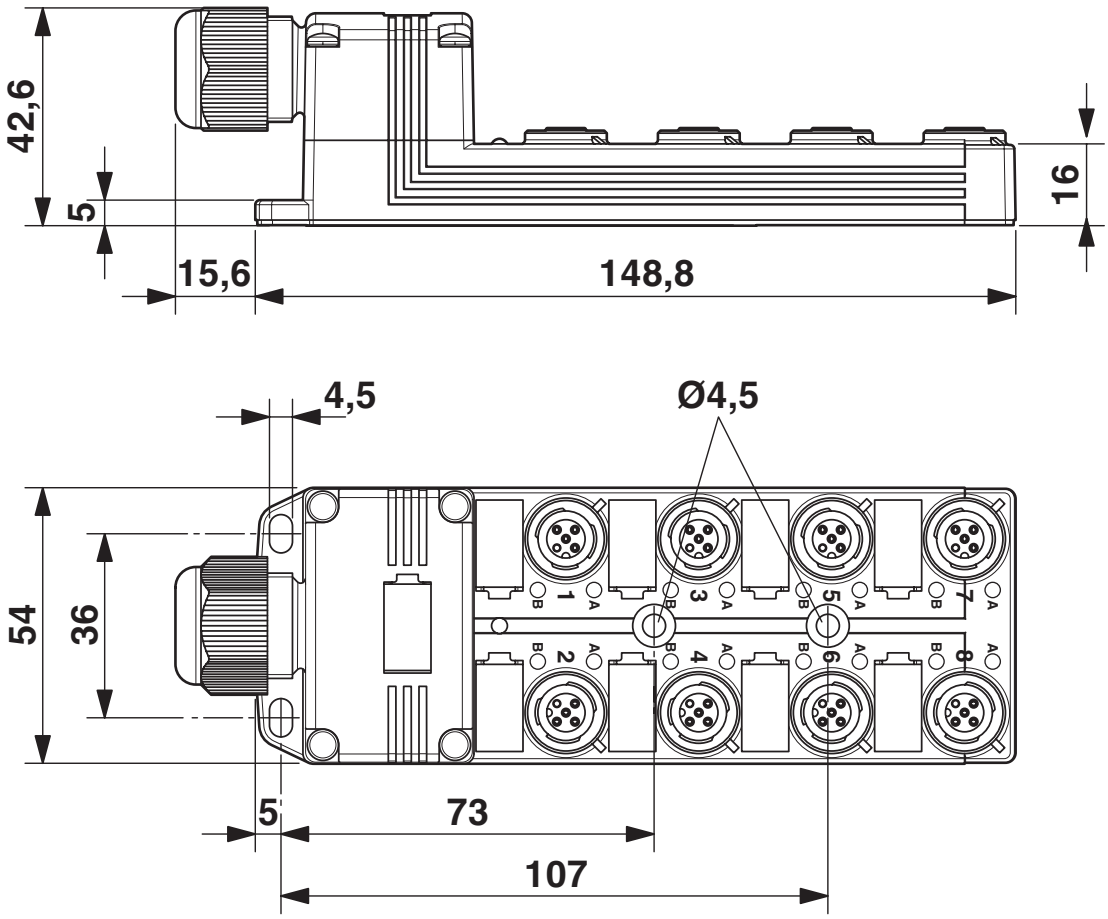

Schematic diagram

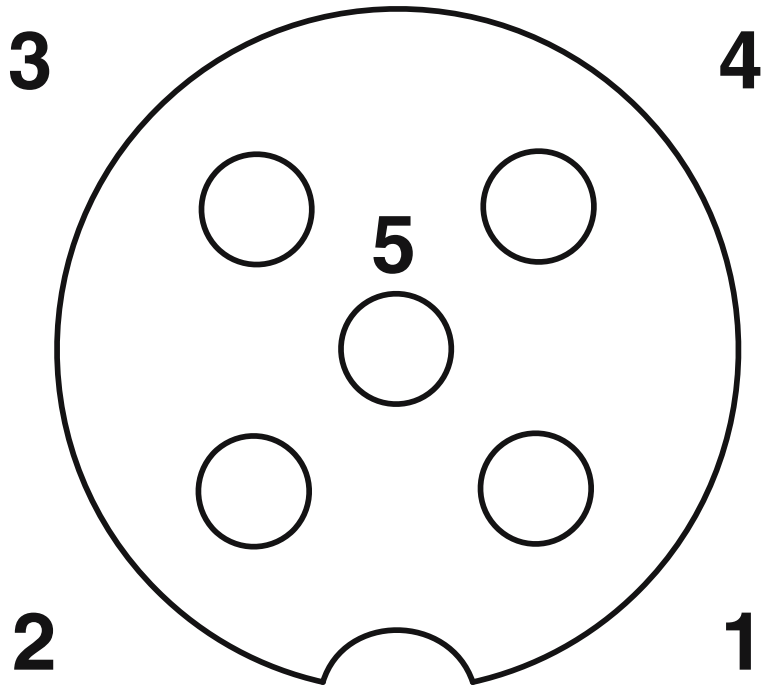

M12 slot, socket, 5-pos.

Circuit diagram

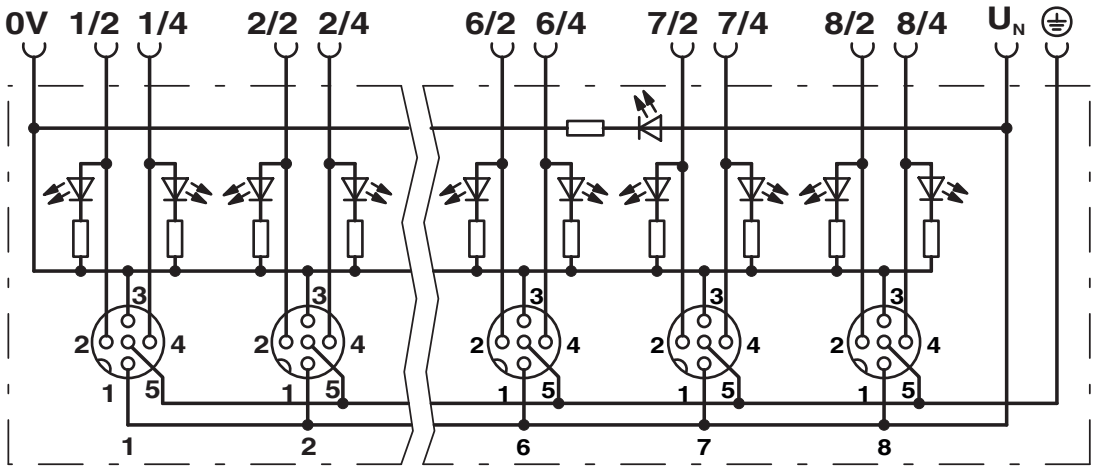

Approvals

To download certificates, visit the product detail page: https://www.phoenixcontact.com/us/products/1452916

cUL Recognized
Approval ID: E118976

	Nominal voltage U_N	Nominal current I_N	Cross section AWG	Cross section mm^2
keine				
	24 V	-	-	-

UL Recognized
Approval ID: E118976

	Nominal voltage U_N	Nominal current I_N	Cross section AWG	Cross section mm^2
keine				
	24 V	-	-	-

cULus Recognized
Approval ID: E221474

	Nominal voltage U_N	Nominal current I_N	Cross section AWG	Cross section mm^2
keine				
	24 V	8 A	-	-

Classifications

ECLASS

ECLASS-13.0	27440111
ECLASS-15.0	27440111

ETIM

ETIM 10.0	EC003558

UNSPSC

UNSPSC 21.0	31251500

Environmental product compliance

EU RoHS

Fulfills EU RoHS substance requirements	Yes, No exemptions

China RoHS

Environment friendly use period (EFUP)	EFUP-E
	No hazardous substances above the limits

EU REACH SVHC

REACH candidate substance (CAS No.)	No substance above 0.1 wt%

Phoenix Contact 2026 © - all rights reserved
https://www.phoenixcontact.com

Phoenix Contact USA
586 Fulling Mill Road
Middletown, PA 17057, United States
(+717) 944-1300
info@phoenixcon.com