SAC-3P- 5,0-PUR/C-1L-Z - Sensor/actuator cable

1435551

https://www.phoenixcontact.com/us/products/1435551

Please be informed that the data shown in this PDF document is generated from our online catalog. Please find the complete data in the user documentation. Our general terms of use for downloads are valid.



Sensor/actuator cable, 3-position, PUR halogen-free, black-gray RAL 7021, free cable end, on Valve connector C (8 mm), with 1 LED, Wiring: Z diode, cable length: 5 m

Your advantages

- Easy and safe: 100 % electrically tested plug-in components
- Convenient: increased machine availability thanks to quick and easy diagnostics
- Our standard: robust halogen-free PUR cable

Commercial data

Item number	1435551
Packing unit	1 pc
Minimum order quantity	1 pc
Sales key	BF07
Product key	AF1DEA
GTIN	4046356413824
Weight per piece (including packing)	170 g
Weight per piece (excluding packing)	157.7 g
Customs tariff number	85444290
Country of origin	PL

Technical data

Product properties

Product type	Sensor/actuator cable with valve connector
Application	Standard
Number of positions	3
No. of cable outlets	1
Shielded	no

Insulation characteristics

Overvoltage category	III
Degree of pollution	3

Connection data

Conductor connection

Tightening torque	0.6 Nm (Valve connector)

Material specifications

Flammability rating according to UL 94	V0
Seal material	TPU (Seal molded)
Material housing valve plug	TPU
Contact material	CuSn
Valve plug contact insert material	PA 6.6
Contact surface material	Sn
Outer sheath, material	PVC

Electrical properties

Insulation resistance	≥ 100 MΩ
Nominal voltage U_N	24 V AC
	24 V DC
Nominal current I_N	4 A

Valve connector characteristics

Fixing screws	M2,5 x 27,5
Pulse power	40 W (at 100 µs square-wave pulse)
Terminal voltage	70 V (at 2 mA constant current)
Reverse voltage	50 V

Signaling

Status display	1 LED
Status display present	yes

Connector

Connection 1

Type	free cable end

Connection 2

Type	Valve connector C (8 mm)
Number of positions	3
Material	CuSn (Contact)
	Sn (Contact surface)
	PA 6.6 (Contact carrier)
	TPU (Housing)
Protective circuit	Z diode

Cable/line

Cable length	5 m

PUR halogen-free black [PUR]

Dimensional drawing	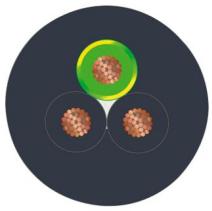
Cable weight	30 kg/km
UL AWM Style	20549
Number of positions	3
Shielded	no
Cable type	PUR halogen-free black [PUR]
Conductor structure signal line	28x 0.15 mm
AWG signal line	20
Conductor cross-section	3x 0.5 mm²
Wire diameter incl. insulation	1.5 mm ±0.05 mm (Signal line)
External cable diameter	4.50 mm ±0.2 mm
Outer sheath, material	PUR
External sheath, color	black-gray RAL 7021
Conductor material	Bare Cu litz wires
Material wire insulation	PP
Single wire, color	black 1, black 2, green/yellow
Overall twist	3 wires, twisted
Max. conductor resistance	39 Ω/km (at 20 °C)
Insulation resistance	min. 20 MΩ*km
Nominal voltage, cable	≤ 300 V
Test voltage	≥ 1200 V
Minimum bending radius, fixed installation	5 x D
Minimum bending radius, flexible installation	10 x D

Smallest bending radius, fixed installation	22.5 mm
Smallest bending radius, movable installation	45 mm
Dynamic load capacity (bending)	Max. bending cycles: 15000000, Bending radius: 50 mm, Traversing path: 0.9 m, Traversing rate: 5 m/s, Acceleration: 30 m/s²
Halogen-free	in accordance with DIN VDE 0472 part 815
Flame resistance	according to DIN VDE 0482
	According to DIN EN 50265-2-1
Resistance to oil	in accordance with DIN EN 60811-2-1
Other resistance	largely oil-resistant
	partly UV-resistant (in accordance with DIN EN ISO 4892-2-A)
Ambient temperature (operation)	-40 °C ... 80 °C (cable, fixed installation)
	-20 °C ... 80 °C (Cable, flexible installation)

Environmental and real-life conditions

Ambient conditions

Degree of protection	IP65
	IP67
Ambient temperature (operation) (Valve connector)	-20 °C ... 85 °C (Valve connector)

Standards and regulations

Valve connector

Standard designation	Valve connector
Standards/specifications	EN 175301-803

Drawings

Dimensional drawing

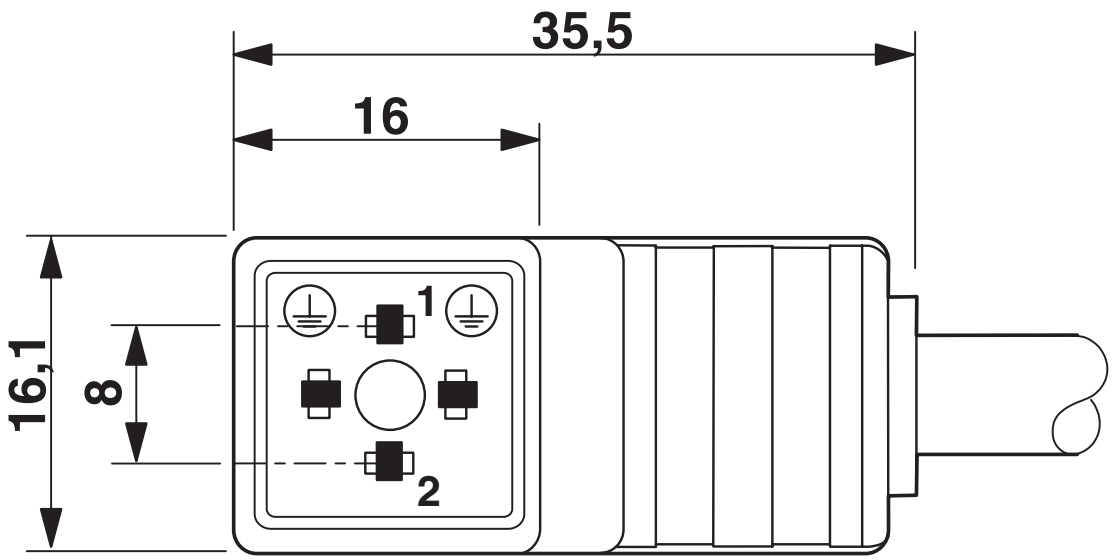

Valve connector, type C

Dimensional drawing

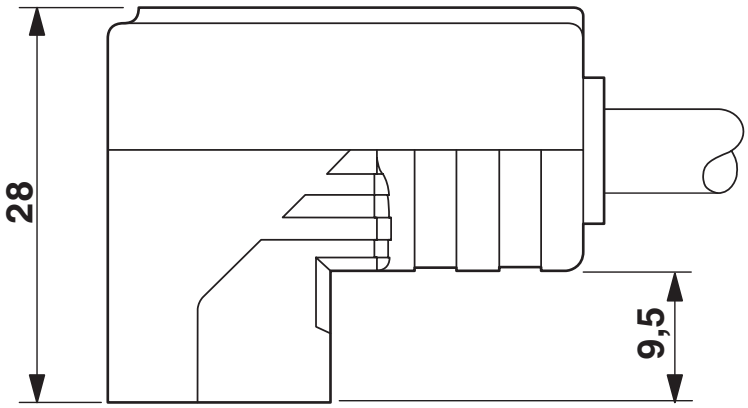

Valve connector, type C, side view

Schematic diagram

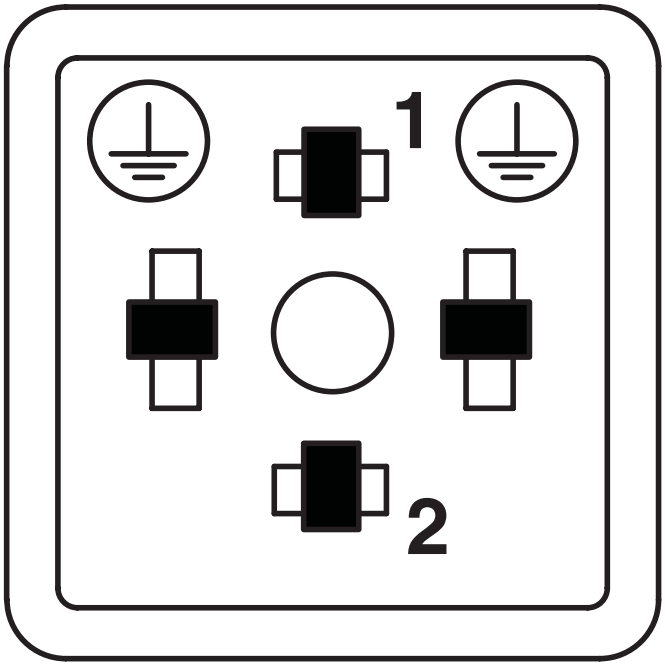

Valve connector connector pin assignment, type C

Circuit diagram

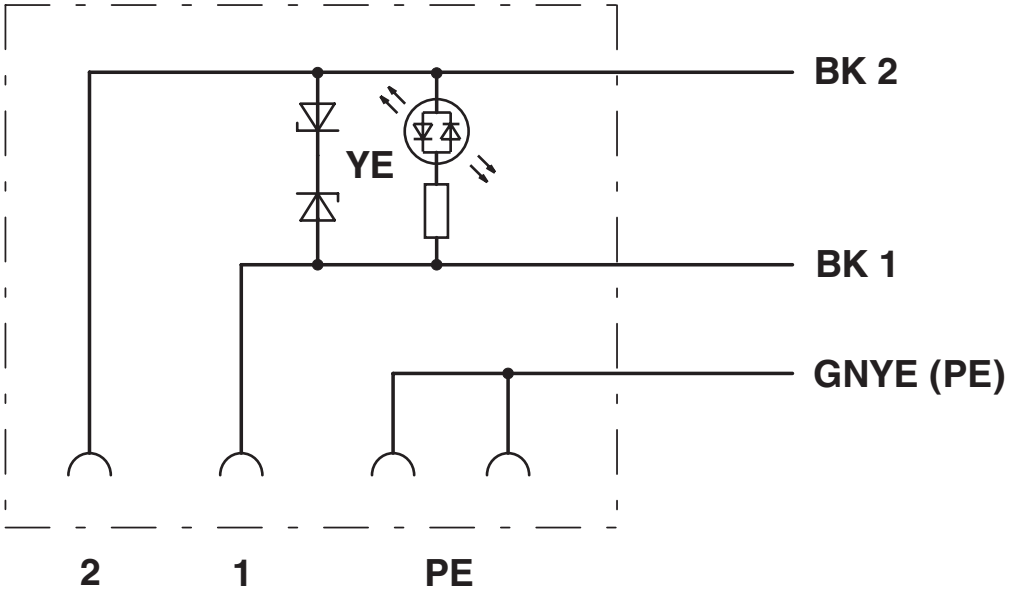

Contact assignment of the valve plug

Approvals

To download certificates, visit the product detail page: https://www.phoenixcontact.com/us/products/1435551

EAC-RoHS
Approval ID: RU D-DE.HB35.B.00387

CSAus
Approval ID: 13631

	Nominal voltage U_N	Nominal current I_N	Cross section AWG	Cross section mm^2
keine				
	24 V	6 A	-	-

Classifications

ECLASS

ECLASS-13.0	27060312
ECLASS-15.0	27060312

ETIM

ETIM 10.0	EC001855

UNSPSC

UNSPSC 21.0	31251500

Environmental product compliance

EU RoHS

Fulfills EU RoHS substance requirements	Yes
Exemption	7(c)-I

China RoHS

Environment friendly use period (EFUP)	EFUP-50
	An article-related China RoHS declaration table can be found in the download area for the respective article under "Manufacturer declaration". For all articles with EFUP-E, no China RoHS declaration table issued and required.

EU REACH SVHC

REACH candidate substance (CAS No.)	Diboron trioxide(CAS: 1303-86-2)
	Lead monoxide (lead oxide)(CAS: 1317-36-8)
SCIP	3c4954e7-9ff4-446b-9452-79407bfa23b2

EF3.1 Climate Change

CO2e kg	3.079 kg CO2e

Phoenix Contact 2026 © - all rights reserved
https://www.phoenixcontact.com

Phoenix Contact USA
586 Fulling Mill Road
Middletown, PA 17057, United States
(+717) 944-1300
info@phoenixcon.com