# SAC-3P- 1,5-PUR/A-1L-Z - Sensor/actuator cable

1434989

https://www.phoenixcontact.com/us/products/1434989

Please be informed that the data shown in this PDF document is generated from our online catalog. Please find the complete data in the user documentation. Our general terms of use for downloads are valid.



Sensor/actuator cable, 3-position, PUR halogen-free, black-gray RAL 7021, free cable end, on Valve connector A, with 1 LED, Wiring: Z diode, cable length: 1.5 m

## Your advantages

- Easy and safe: 100 % electrically tested plug-in components
- Convenient: increased machine availability thanks to quick and easy diagnostics
- Our standard: robust halogen-free PUR cable

## Commercial data

| | |
|---|---|
| Item number | 1434989 |
| Packing unit | 1 pc |
| Minimum order quantity | 1 pc |
| Sales key | BF07 |
| Product key | AF1DAA |
| GTIN | 4046356413367 |
| Weight per piece (including packing) | 74 g |
| Weight per piece (excluding packing) | 69.4 g |
| Customs tariff number | 85444290 |
| Country of origin | PL |

# Technical data

## Product properties

| | |
|---|---|
| Product type | Sensor/actuator cable with valve connector |
| Application | Standard |
| Number of positions | 3 |
| No. of cable outlets | 1 |
| Shielded | no |

### Insulation characteristics

| | |
|---|---|
| Overvoltage category | III |
| Degree of pollution | 3 |

## Connection data

### Conductor connection

| | |
|---|---|
| Tightening torque | 0.6 Nm (Valve connector) |

## Material specifications

| | |
|---|---|
| Flammability rating according to UL 94 | V0 |
| Seal material | TPU (Seal molded) |
| Material housing valve plug | TPU |
| Contact material | CuSn |
| Valve plug contact insert material | PA 6.6 |
| Contact surface material | Sn |

## Electrical properties

| | |
|---|---|
| Insulation resistance | ≥ 100 MΩ |
| Nominal voltage $U_N$ | 24 V AC |
| | 24 V DC |
| Nominal current $I_N$ | 4 A |

### Valve connector characteristics

| | |
|---|---|
| Fixing screws | M3 x 29 |
| Pulse power | 40 W (at 100 µs square-wave pulse) |
| Terminal voltage | 70 V (at 2 mA constant current) |
| Reverse voltage | 50 V |

## Mechanical properties

### Mechanical data

| | |
|---|---|
| Insertion/withdrawal cycles | 50 |

## Signaling

| | |
|---|---|
| Status display | 1 LED |
| Status display present | yes |

## Connector

Connection 1

| | |
|---|---|
| Type | free cable end |

Connection 2

| | |
|---|---|
| Type | Valve connector A |
| Number of positions | 3 |
| Material | CuSn (Contact) |
| | Sn (Contact surface) |
| | PA 6.6 (Contact carrier) |
| | TPU (Housing) |
| Protective circuit | Z diode |

## Cable/line

| | |
|---|---|
| Cable length | 1.5 m |

PUR halogen-free black [PUR]

| | |
|---|---|
| Dimensional drawing | 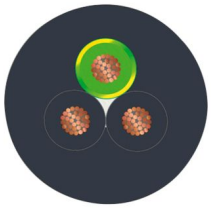 |
| Cable weight | 30 kg/km |
| UL AWM Style | 20549 |
| Number of positions | 3 |
| Shielded | no |
| Cable type | PUR halogen-free black [PUR] |
| Conductor structure signal line | 28x 0.15 mm |
| AWG signal line | 20 |
| Conductor cross-section | 3x 0.5 mm² |
| Wire diameter incl. insulation | 1.5 mm ±0.05 mm (Signal line) |
| External cable diameter | 4.50 mm ±0.2 mm |
| Outer sheath, material | PUR |
| External sheath, color | black-gray RAL 7021 |
| Conductor material | Bare Cu litz wires |
| Material wire insulation | PP |
| Single wire, color | black 1, black 2, green/yellow |
| Overall twist | 3 wires, twisted |
| Max. conductor resistance | 39 Ω/km (at 20 °C) |
| Insulation resistance | min. 20 MΩ*km |

| | |
|---|---|
| Nominal voltage, cable | ≤ 300 V |
| Test voltage | ≥ 1200 V |
| Minimum bending radius, fixed installation | 5 x D |
| Minimum bending radius, flexible installation | 10 x D |
| Smallest bending radius, fixed installation | 22.5 mm |
| Smallest bending radius, movable installation | 45 mm |
| Dynamic load capacity (bending) | Max. bending cycles: 15000000, Bending radius: 50 mm, Traversing path: 0.9 m, Traversing rate: 5 m/s, Acceleration: 30 m/s² |
| Halogen-free | in accordance with DIN VDE 0472 part 815 |
| Flame resistance | according to DIN VDE 0482 |
| | According to DIN EN 50265-2-1 |
| Resistance to oil | in accordance with DIN EN 60811-2-1 |
| Other resistance | largely oil-resistant |
| | partly UV-resistant (in accordance with DIN EN ISO 4892-2-A) |
| Ambient temperature (operation) | -40 °C ... 80 °C (cable, fixed installation) |
| | -20 °C ... 80 °C (Cable, flexible installation) |

## Environmental and real-life conditions

### Ambient conditions

| | |
|---|---|
| Degree of protection | IP65 |
| | IP67 |
| Ambient temperature (operation) (Valve connector) | -20 °C ... 85 °C (Valve connector) |

## Standards and regulations

| | |
|---|---|
| Standard designation | Valve connector |
| Standards/specifications | EN 175301-803 |

## Drawings

Dimensional drawing

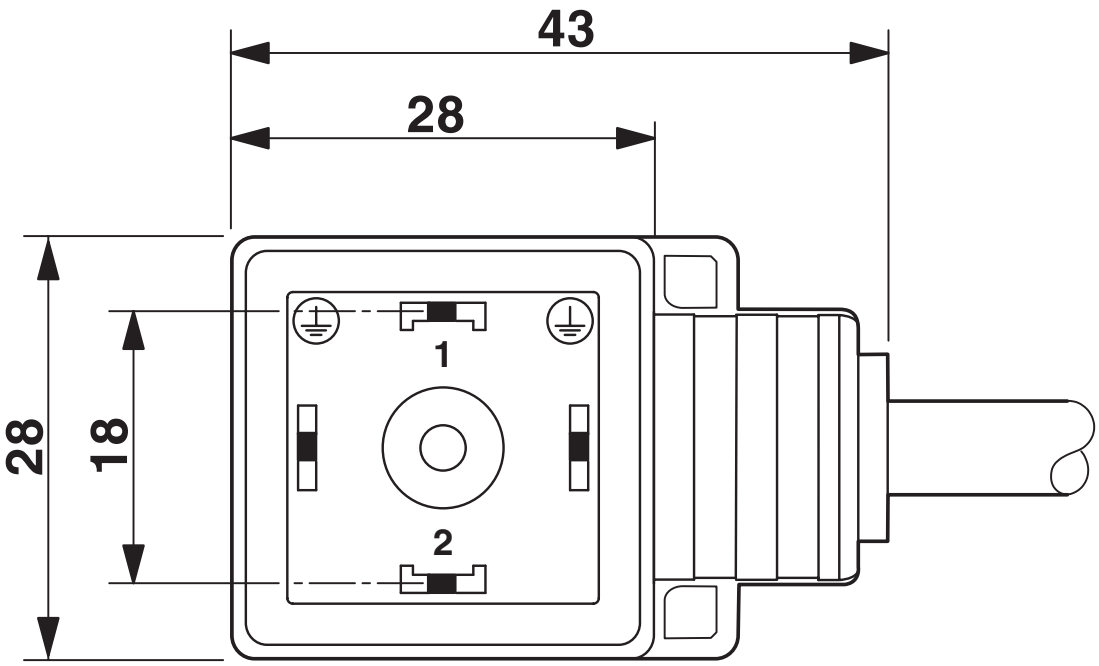


Valve connector, type A, side view

Dimensional drawing

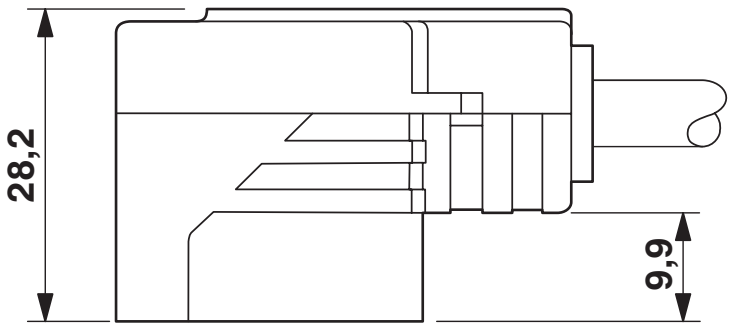


Valve connector, type A, side view

Schematic diagram

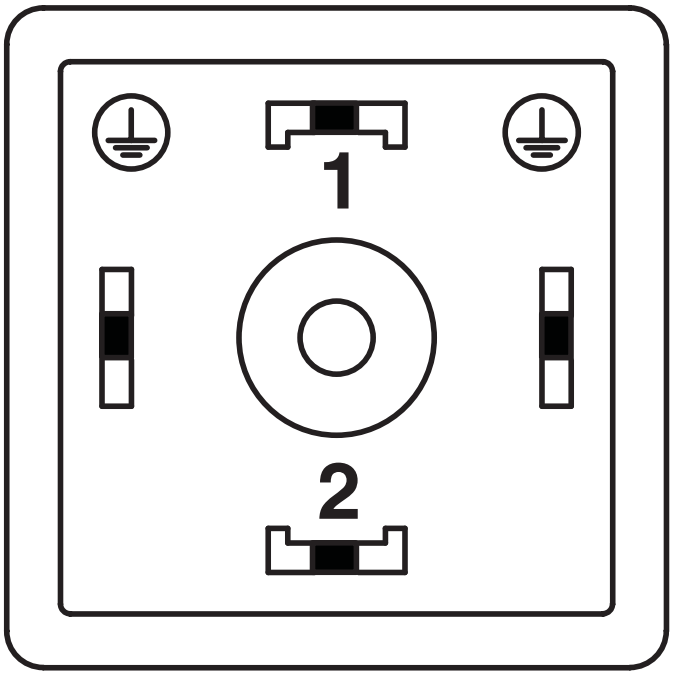


Valve connector pin assignment, type A

Circuit diagram

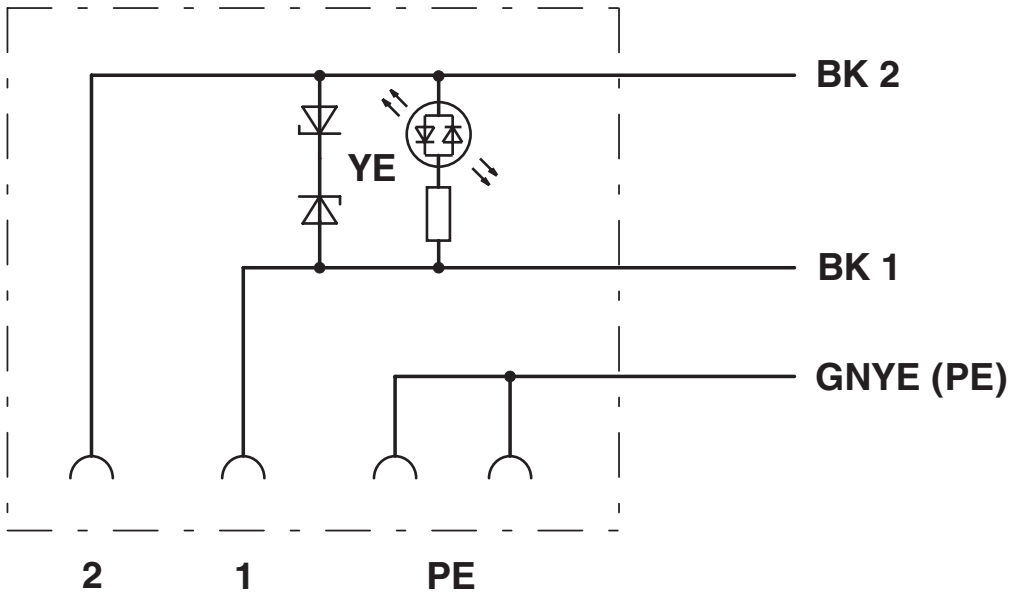


Contact assignment of the valve plug

## Approvals

To download certificates, visit the product detail page: https://www.phoenixcontact.com/us/products/1434989

**CSA**
Approval ID: 13631

| | Nominal voltage $U_N$ | Nominal current $I_N$ | Cross section AWG | Cross section $mm^2$ |
|---|---|---|---|---|
| keine | | | | |
| | 24 V | 4 A | - | - |

**EAC-RoHS**
Approval ID: RU D-DE.HB35.B.00387

**CSAus**
Approval ID: 13631

| | Nominal voltage $U_N$ | Nominal current $I_N$ | Cross section AWG | Cross section $mm^2$ |
|---|---|---|---|---|
| keine | | | | |
| | 24 V | 4 A | - | - |

## Classifications

### ECLASS

| | |
|---|---|
| ECLASS-13.0 | 27060312 |
| ECLASS-15.0 | 27060312 |

### ETIM

| | |
|---|---|
| ETIM 10.0 | EC001855 |

### UNSPSC

| | |
|---|---|
| UNSPSC 21.0 | 31251500 |

## Environmental product compliance

EU RoHS

| | |
|---|---|
| Fulfills EU RoHS substance requirements | Yes |
| Exemption | 7(c)-I |

China RoHS

| | |
|---|---|
| Environment friendly use period (EFUP) | EFUP-50 |
| | An article-related China RoHS declaration table can be found in the download area for the respective article under "Manufacturer declaration". For all articles with EFUP-E, no China RoHS declaration table issued and required. |

EU REACH SVHC

| | |
|---|---|
| REACH candidate substance (CAS No.) | Diboron trioxide(CAS: 1303-86-2) |
| | Lead monoxide (lead oxide)(CAS: 1317-36-8) |
| SCIP | 9e3cd3a3-cfb5-4a1e-83af-5198d561028c |

EF3.1 Climate Change

| | |
|---|---|
| CO2e kg | 3.59 kg CO2e |

Phoenix Contact 2026 © - all rights reserved
https://www.phoenixcontact.com

Phoenix Contact USA
586 Fulling Mill Road
Middletown, PA 17057, United States
(+717) 944-1300
info@phoenixcon.com