SAC-12P- 3,0-PUR/FR SCO - Sensor/actuator cable

1430666

https://www.phoenixcontact.com/us/products/1430666

Please be informed that the data shown in this PDF document is generated from our online catalog. Please find the complete data in the user documentation. Our general terms of use for downloads are valid.



Sensor/actuator cable, 12-position, PUR halogen-free, black RAL 9005, free cable end, on Socket angled M12 SPEEDCON, coding: A, cable length: 3 m

Your advantages

- Easy and safe: 100 % electrically tested plug-in components
- Save time, thanks to installation with SPEEDCON fast locking system
- Our standard: robust halogen-free PUR cable
- Save space – with high-pos. connectors

Commercial data

Item number	1430666
Packing unit	1 pc
Minimum order quantity	1 pc
Sales key	BF03
Product key	AF1CGA
GTIN	4046356456470
Weight per piece (including packing)	193.7 g
Weight per piece (excluding packing)	186.4 g
Customs tariff number	85444290
Country of origin	DE

Technical data

Product properties

Product type	Sensor/actuator cable
Application	Standard
Number of positions	12
No. of cable outlets	1
Shielded	no
Coding	A

Insulation characteristics

Overvoltage category	II
Degree of pollution	3

Material specifications

Flammability rating according to UL 94	V0
Seal material	NBR
Material of grip body	TPU, hardly inflammable, self-extinguishing
Contact material	CuZn
Contact surface material	Ni/Au
Contact carrier material	PA 6.6
Material for screw connection	Zinc die-cast, nickel-plated

Electrical properties

Insulation resistance	≥ 100 MΩ
Nominal voltage U_N	30 V AC
	30 V DC
Nominal current I_N	1.5 A

Signaling

Status display	no
Status display present	no

Connection data

Conductor connection

Tightening torque	0.4 Nm (M12 connector)

Connector

Connection 1

Type	free cable end

Connection 2

Type	Socket angled M12 SPEEDCON
Number of positions	12

Locking type	SPEEDCON
Coding type	A

Cable/line

Cable length	3 m

PUR halogen-free black [PUR]

Dimensional drawing	
Cable weight	17 kg/km
Number of positions	12
Shielded	no
Cable type	PUR halogen-free black [PUR]
Conductor structure signal line	18x 0.10 mm
AWG signal line	26
Conductor cross-section	12x 0.14 mm² (Signal line)
Wire diameter incl. insulation	1 mm ±0.05 mm (Signal line)
External cable diameter	7.20 mm
Outer sheath, material	PUR
External sheath, color	black RAL 9005
Conductor material	Tin-plated Cu litz wires
Material wire insulation	PP
Single wire, color	white, brown, green, yellow, gray, pink, blue, red, black, violet, gray/pink, red/blue
Overall twist	12 wires twisted in layers
Max. conductor resistance	142 Ω/km
Nominal voltage, cable	≤ 300 V
Test voltage	≥ 1500 V
Minimum bending radius, fixed installation	5 x D
Minimum bending radius, flexible installation	10 x D
Smallest bending radius, fixed installation	36 mm
Smallest bending radius, movable installation	72 mm
Dynamic load capacity (bending)	Max. bending cycles: 4000000, Bending radius: 54 mm, Traversing path: 10 m, Traversing rate: 3 m/s, Acceleration: 10 m/s²
Halogen-free	in accordance with DIN EN 50267-2-1
Flame resistance	in acc. to UL VW1
	DIN EN 60332-1-2
Resistance to oil	EN 60811-2-1

Other resistance	EN 50525-2-21:2012-01
	partly UV-resistant (in accordance with DIN EN ISO 4892-2-A)
Special properties	Low adhesion surface
Ambient temperature (operation)	-40 °C ... 80 °C (cable, fixed installation)
	-5 °C ... 80 °C (Cable, flexible installation)

Environmental and real-life conditions

Ambient conditions

Degree of protection	IP65
	IP67
	IP68
Ambient temperature (operation) (male connector/female connector)	-25 °C ... 85 °C (Plug / socket)
Ambient temperature (operation) (Cable, fixed installation)	-40 °C ... 80 °C (cable, fixed installation)
Ambient temperature (operation) (Cable, flexible installation)	-20 °C ... 80 °C (Cable, flexible installation)

Standards and regulations

Standard designation	M12 connector
Standards/specifications	IEC 61076-2-101

Drawings

Dimensional drawing

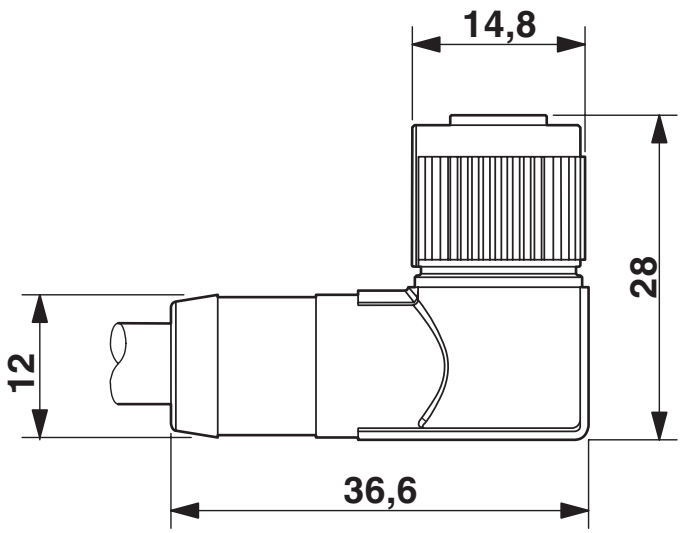

Socket M12-SPEEDCON, angled, shielded

Schematic diagram

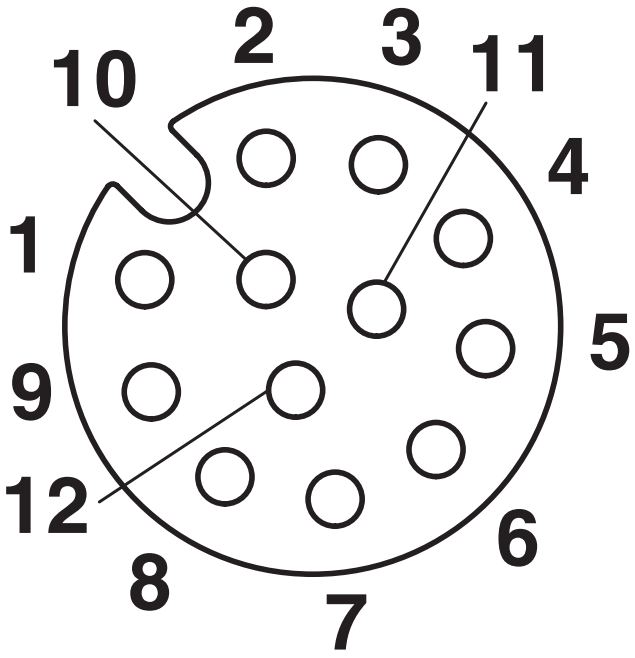

Pin assignment M12, 12-pos., female side view

Circuit diagram

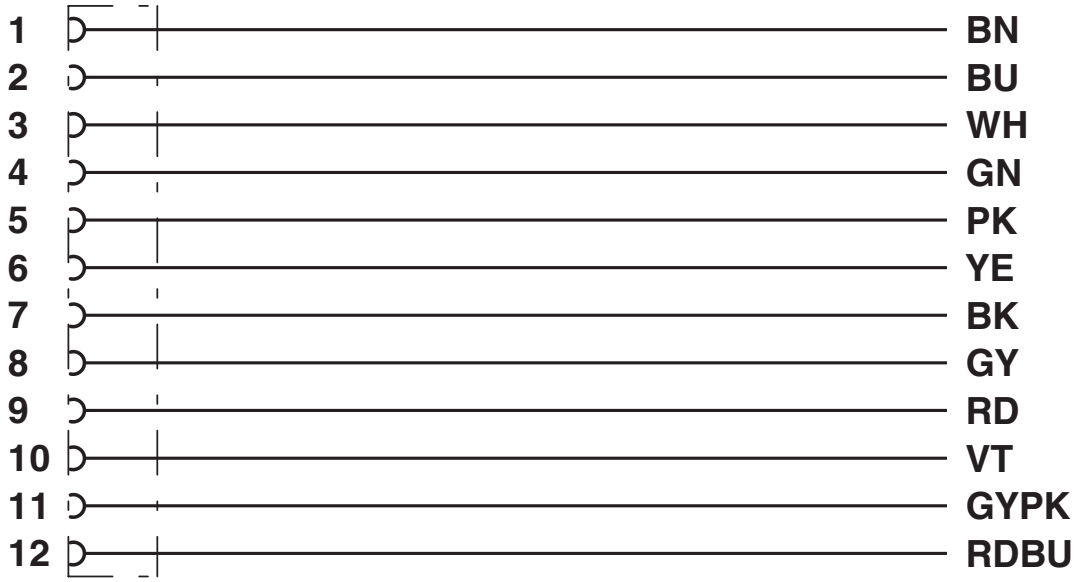

Contact assignment of the M12 socket

Approvals

To download certificates, visit the product detail page: https://www.phoenixcontact.com/us/products/1430666

UL Listed
Approval ID: E221474

	Nominal voltage U_N	Nominal current I_N	Cross section AWG	Cross section mm^2
keine				
	30 V	1 A	-	-

EAC-RoHS
Approval ID: RU D-DE.HB35.B.00387

Classifications

ECLASS

ECLASS-13.0	27060311
ECLASS-15.0	27060311

ETIM

ETIM 10.0	EC001855

UNSPSC

UNSPSC 21.0	26121600

Environmental product compliance

EU RoHS

Fulfills EU RoHS substance requirements	Yes, No exemptions

China RoHS

Environment friendly use period (EFUP)	EFUP-E
	No hazardous substances above the limits

EU REACH SVHC

REACH candidate substance (CAS No.)	No substance above 0.1 wt%

EF3.1 Climate Change

CO2e kg	3.864 kg CO2e

Phoenix Contact 2026 © - all rights reserved
https://www.phoenixcontact.com

Phoenix Contact USA
586 Fulling Mill Road
Middletown, PA 17057, United States
(+717) 944-1300
info@phoenixcon.com