# SAC-5PT-FB/MB-MBF PBDP SH - T distributor

1424713

https://www.phoenixcontact.com/us/products/1424713

Please be informed that the data shown in this PDF document is generated from our online catalog. Please find the complete data in the user documentation. Our general terms of use for downloads are valid.



T distributor, PROFIBUS DP (12 Mbps), 5-position, shielded, Socket straight M12, coding: B, on Plug straight M12, coding: B and Plug straight M12, coding: B, Fixed M12 thread on plug input

## Your advantages

- Safe use in the field, thanks to a high degree of protection
- Reliable signal transmission – 360° shielding in environments with electromagnetic interference

## Commercial data

| | |
|---|---|
| Item number | 1424713 |
| Packing unit | 1 pc |
| Minimum order quantity | 1 pc |
| Sales key | BF10 |
| Product key | AF1GAA |
| GTIN | 4055626376769 |
| Weight per piece (including packing) | 50.3 g |
| Weight per piece (excluding packing) | 50.3 g |
| Customs tariff number | 85366990 |
| Country of origin | DE |

## Technical data

### Product properties

| | |
|---|---|
| Product type | T-distributor |
| Number of positions | 5 |
| No. of cable outlets | 2 |
| Shielded | yes |
| Coding | B |
| Thread type | M12 |

Insulation characteristics

| | |
|---|---|
| Overvoltage category | II |
| Degree of pollution | 3 |

### Electrical properties

| | |
|---|---|
| Nominal voltage $U_N$ | 48 V AC |
| | 60 V DC |
| Nominal current $I_N$ | 1 A (Contact 2 and 4) |
| | 4 A (Contact 1 and 3) |
| Transmission medium | Copper |
| Transmission speed | 12 Mbps |

### Interfaces

| | |
|---|---|
| Signal type/category | PROFIBUS DP, 12 Mbps |

### Signaling

| | |
|---|---|
| Status display | no |
| Status display present | no |

### Dimensions

| | |
|---|---|
| Dimensional drawing | 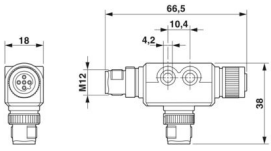  |
| Height | 18 mm |
| Length | 66.5 mm |

### Material specifications

| | |
|---|---|
| Material | PBT (Female connector contact carrier) |
| | (Pin contact carrier) |
| Flammability rating according to UL 94 | V0 |
| Seal material | NBR |
| Material of grip body | PBT |

| | |
|---|---|
| Contact material | CuZn (pin) / CuSn (socket) |
| Contact surface material | Ni/Au |
| Material for screw connection | Zinc die-cast, nickel-plated |

## Connector

Connection 1

| | |
|---|---|
| Type | Socket straight M12 |
| Coding type | B |

Connection 2

| | |
|---|---|
| Type | Plug straight M12 |
| Coding type | B |

Connection 3

| | |
|---|---|
| Type | Plug straight M12 |
| Coding type | B |

## Mechanical properties

Mechanical data

| | |
|---|---|
| Insertion/withdrawal cycles | ≥ 100 |

## Environmental and real-life conditions

Ambient conditions

| | |
|---|---|
| Degree of protection | IP65 |
| Ambient temperature (operation) (male connector/female connector) | -25 °C ... 85 °C (Plug / socket) |

## Standards and regulations

| | |
|---|---|
| Standard designation | M12 connector |
| Standards/specifications | according to IEC 61076-2-101 |

## Drawings

Dimensional drawing

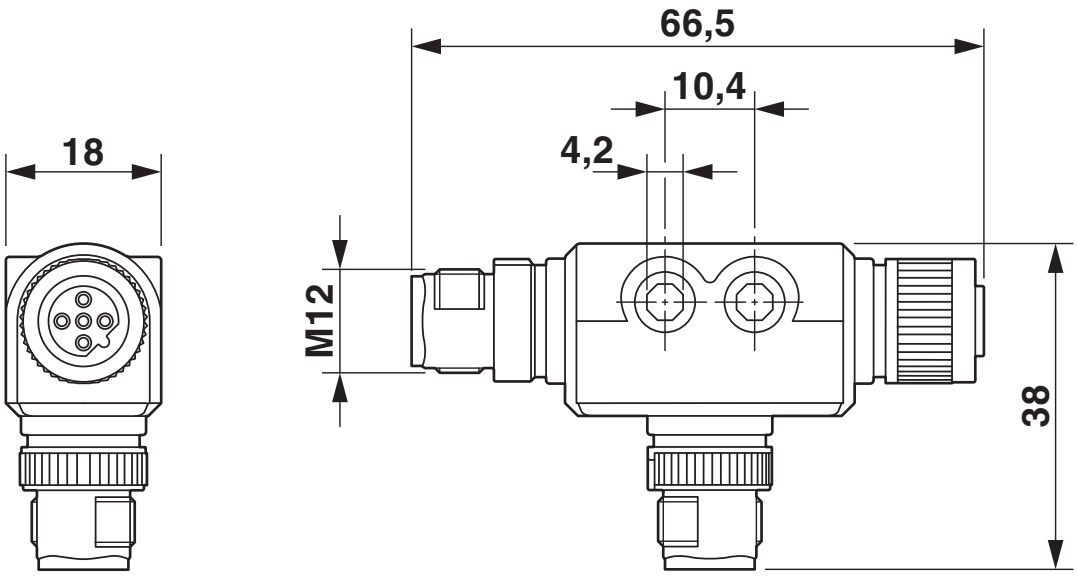


M12 T distributor

Schematic diagram

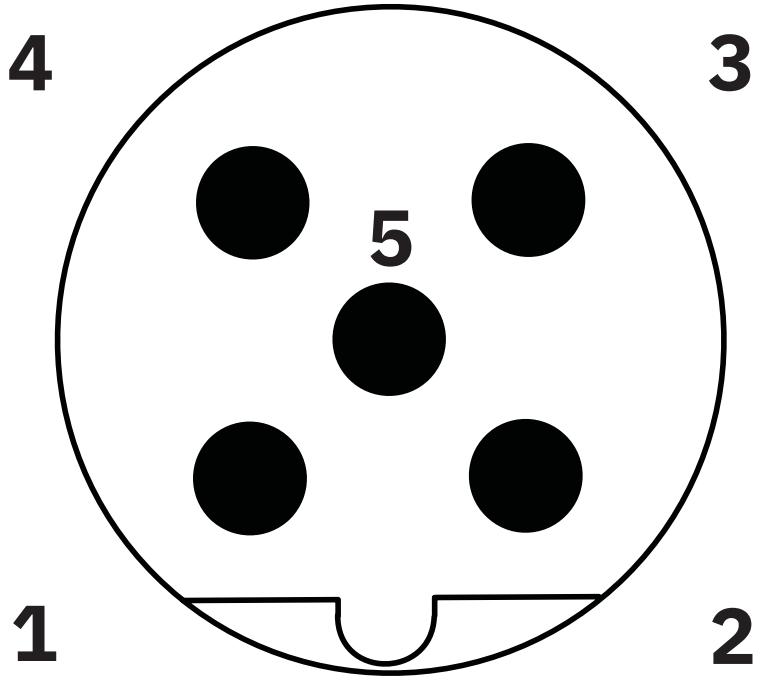


Pin assignment M12 male connector, 5-pos., B-coded, male side

Schematic diagram

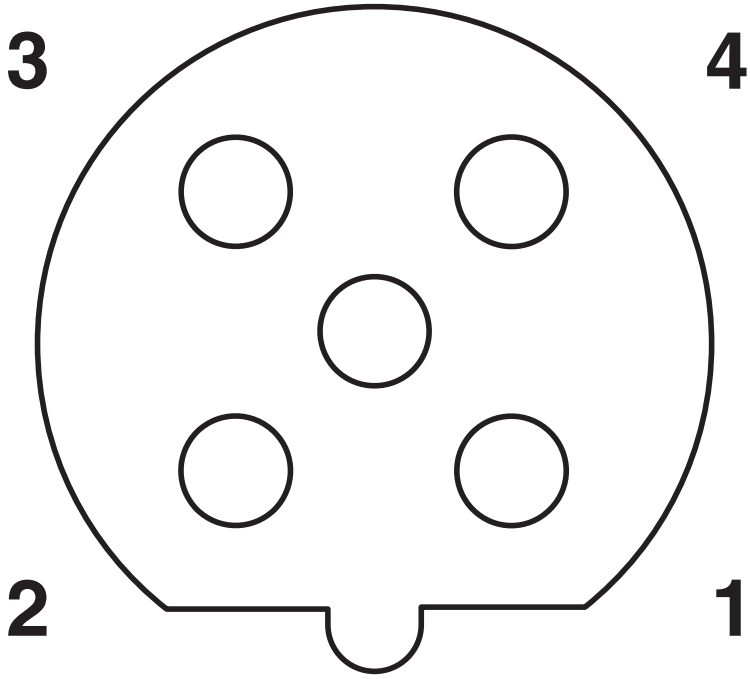


Pin assignment M12 socket, 5-pos., B-coded, female side

Circuit diagram

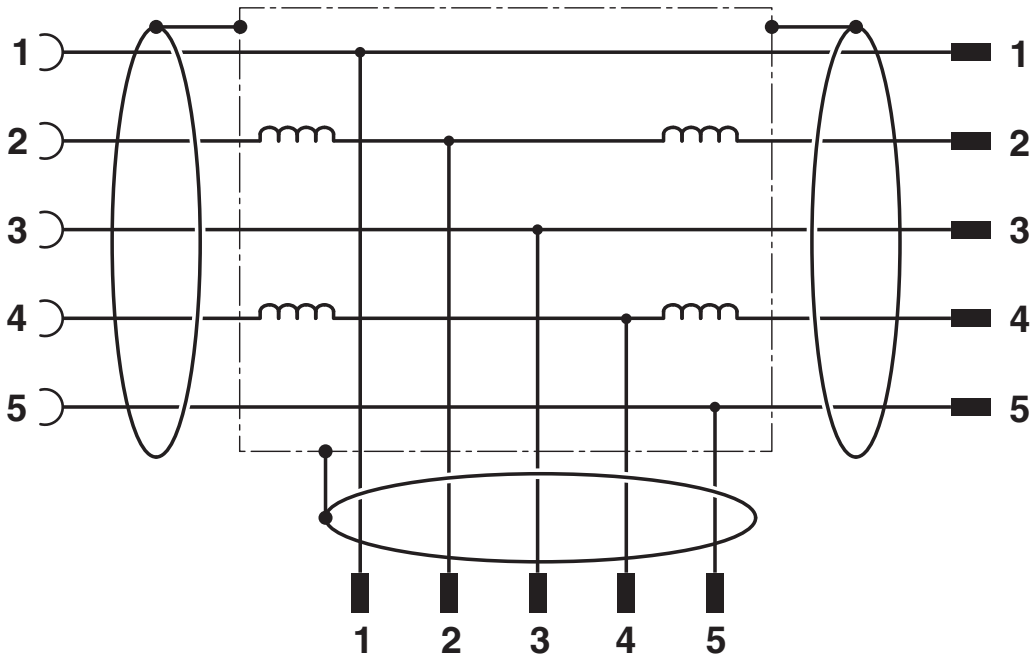


Contact assignment of the M12 plug and the M12 socket

## Classifications

### ECLASS

| | |
|---|---|
| ECLASS-13.0 | 27440106 |
| ECLASS-15.0 | 27440106 |

### ETIM

| | |
|---|---|
| ETIM 10.0 | EC002925 |

### UNSPSC

| | |
|---|---|
| UNSPSC 21.0 | 31251500 |

## Environmental product compliance

EU RoHS

| | |
|---|---|
| Fulfills EU RoHS substance requirements | Yes, No exemptions |

China RoHS

| | |
|---|---|
| Environment friendly use period (EFUP) | EFUP-E |
| | No hazardous substances above the limits |

EU REACH SVHC

| | |
|---|---|
| REACH candidate substance (CAS No.) | No substance above 0.1 wt% |


Phoenix Contact 2026 © - all rights reserved
https://www.phoenixcontact.com



Phoenix Contact USA
586 Fulling Mill Road
Middletown, PA 17057, United States
(+717) 944-1300
info@phoenixcon.com