SACC-M12FR-5PL - Connector

1424690

https://www.phoenixcontact.com/us/products/1424690

Please be informed that the data shown in this PDF document is generated from our online catalog. Please find the complete data in the user documentation. Our general terms of use for downloads are valid.

Connector, Universal, 5-position, unshielded, Socket angled M12, coding: A, Push-lock spring connection, knurl material: Plastic, external cable diameter 4 mm ... 8 mm

Your advantages

- Time-saving Push-Lock connection: Tool-free connection and disconnection of conductors by opening the contact levers
- Intuitive connection: Easy assignment of individual litz wires with color-coded and numerical identification of the contact levers
- Integrated Push-in Technology: Wire rigid and pretreated conductors easily by means of simple, direct insertion
- Shock- and vibration-resistant connection: Proven spring-cage technology guarantees secure and reliable contacting
- Flexible cable outlets with angled connectors

Commercial data

Item number	1424690
Packing unit	1 pc
Minimum order quantity	1 pc
Sales key	BF33
Product key	AF2CFA
GTIN	4055626376172
Weight per piece (including packing)	15 g
Weight per piece (excluding packing)	15.6 g
Customs tariff number	85366990
Country of origin	DE

Technical data

Notes

Assembly note	NOTE: Observe the permissible bending radii when routing cables, since the degree of protection may be at risk if the bending forces are too high. Reduce mechanical loads upstream of the connector, e.g., by using cable ties.

Mounting

Assembly note	The connector pin assignment can be rotated 45° to the cable outlet
	The wires can be connected both with ferrules and without ferrules

Product properties

Product type	Circular connector (cable-side)
Number of positions	5
No. of cable outlets	1
Shielded	no
Coding	A
Cable outlet	angled

Insulation characteristics

Overvoltage category	II
Degree of pollution	3

Dimensions

Dimensional drawing	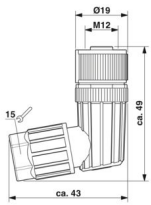
Length	49 mm

External dimensions

Outside diameter	4 mm ... 8 mm

Housing

Diameter housing	19 mm

Material specifications

Flammability rating according to UL 94	V0
Seal material	NBR
Material of grip body	PA 6.6

Contact material	CuSn
Contact surface material	Ni/Au
Contact carrier material	PA 6.6
Material for screw connection	Plastic

Connection data

Conductor connection

Connection method	Push-lock spring connection
Connection cross section	0.14 mm² ... 0.75 mm² (without ferrule)
	0.14 mm² ... 0.5 mm² (with ferrule)
Connection cross section AWG	26 ... 18 (without ferrule)
	26 ... 20 (with ferrule)
Stripping length of the individual wire	7 mm
Tightening torque	0.4 Nm (M12 knurl)
	0.4 Nm (Connector with coupling sleeve)
	1.5 Nm (Pressure nut with coupling sleeve)

Connection assignment

Contact | Color (signal designation) | Contact (optional)	1 = BN
	2 = WH
	3 = BU
	4 = BK
	5 = GY

Electrical properties

Rated surge voltage	1.5 kV
Contact resistance	≤ 5 mΩ
Insulation resistance	≥ 100 MΩ
Nominal voltage U_N	48 V AC
	60 V DC
Nominal current I_N	4 A (2 A when using 0.14 mm² conductors)

Mechanical properties

Mechanical data

Insertion/withdrawal cycles	≥ 100

Connector

Connection 1

Head design	Socket
Head cable outlet	angled
Head thread type	M12
Coding	A

Interfaces

Signal type/category	Universal

Environmental and real-life conditions

Ambient conditions

Degree of protection	IP65
	IP67
Ambient temperature (operation) (male connector/female connector)	-40 °C ... 85 °C (Plug / socket)

Standards and regulations

M12

Standard designation	M12 connector
Standards/specifications	IEC 61076-2-101

Drawings

Dimensional drawing

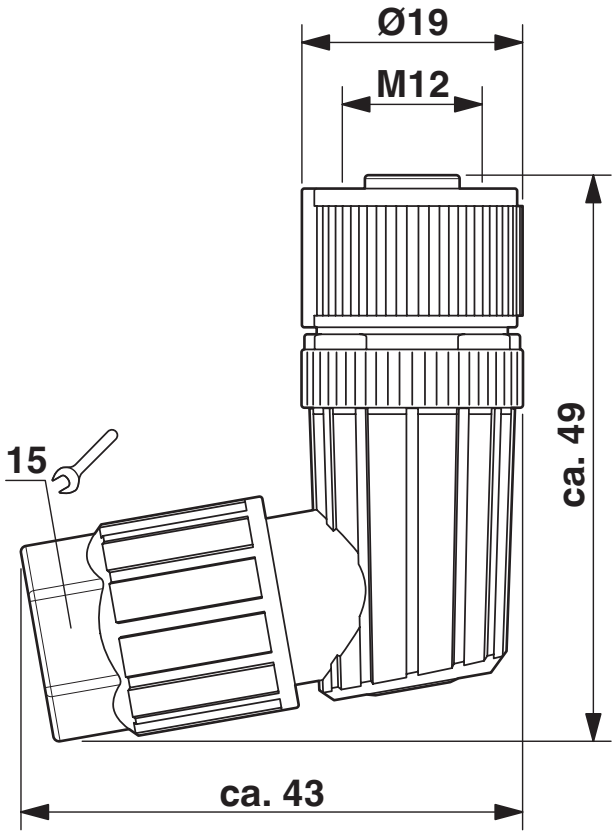

M12 x 1 socket, angled

Functional drawing

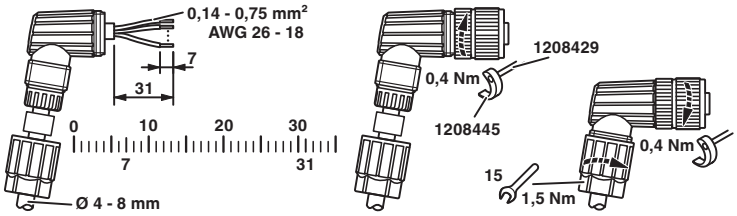

Schematic diagram

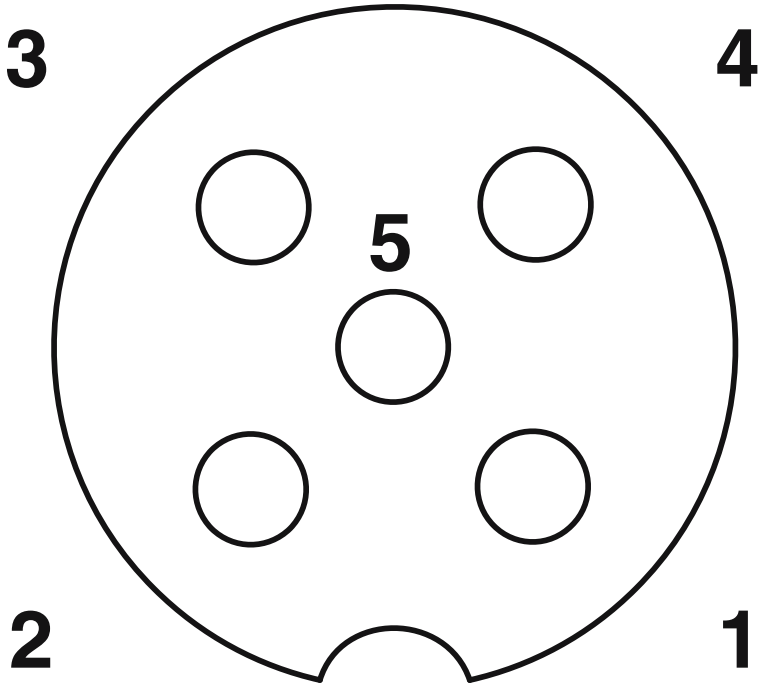

Pin assignment M12 socket, 5-pos., A-coded, socket side view

Approvals

To download certificates, visit the product detail page: https://www.phoenixcontact.com/us/products/1424690

UL Listed
Approval ID: E221474

	Nominal voltage U_N	Nominal current I_N	Cross section AWG	Cross section mm^2
keine				
	250 V	4 A	26 - 18	26 - 18

cUL Listed
Approval ID: E221474

	Nominal voltage U_N	Nominal current I_N	Cross section AWG	Cross section mm^2
keine				
	250 V	4 A	26 - 18	-

Classifications

ECLASS

ECLASS-13.0	27440116
ECLASS-15.0	27440116

ETIM

ETIM 10.0	EC002635

UNSPSC

UNSPSC 21.0	39121400

Environmental product compliance

EU RoHS

Fulfills EU RoHS substance requirements	Yes, No exemptions

China RoHS

Environment friendly use period (EFUP)	EFUP-E
	No hazardous substances above the limits

EU REACH SVHC

REACH candidate substance (CAS No.)	No substance above 0.1 wt%

Phoenix Contact 2026 © - all rights reserved
https://www.phoenixcontact.com

Phoenix Contact USA
586 Fulling Mill Road
Middletown, PA 17057, United States
(+717) 944-1300
info@phoenixcon.com