# SACC-M12FR-5PL SH - Connector

1424661

https://www.phoenixcontact.com/us/products/1424661

Please be informed that the data shown in this PDF document is generated from our online catalog. Please find the complete data in the user documentation. Our general terms of use for downloads are valid.

Connector, Universal, 5-position, shielded, Socket angled M12, coding: A, Push-lock spring connection, knurl material: Zinc die-cast, nickel-plated, external cable diameter 4 mm ... 8 mm

## Your advantages

- Time-saving Push-Lock connection: Tool-free connection and disconnection of conductors by opening the contact levers
- Intuitive connection: Easy assignment of individual litz wires with color-coded and numerical identification of the contact levers
- Integrated Push-in Technology: Wire rigid and pretreated conductors easily by means of simple, direct insertion
- Shock- and vibration-resistant connection: Proven spring-cage technology guarantees secure and reliable contacting
- Safely shielded: Reliable 360° shield connection even under extreme mechanical strain
- Flexible cable outlets with angled connectors

## Commercial data

| | |
|---|---|
| Item number | 1424661 |
| Packing unit | 1 pc |
| Minimum order quantity | 1 pc |
| Sales key | BF33 |
| Product key | AF2CFA |
| GTIN | 4055626375885 |
| Weight per piece (including packing) | 44.4 g |
| Weight per piece (excluding packing) | 44.4 g |
| Customs tariff number | 85366990 |
| Country of origin | DE |

# Technical data

## Notes

| | |
|---|---|
| Assembly note | NOTE: Observe the permissible bending radii when routing cables, since the degree of protection may be at risk if the bending forces are too high. Reduce mechanical loads upstream of the connector, e.g., by using cable ties. |

## Mounting

| | |
|---|---|
| Assembly note | The connector pin assignment can be rotated 45° to the cable outlet |
| | The wires can be connected both with ferrules and without ferrules |

## Product properties

| | |
|---|---|
| Product type | Circular connector (cable-side) |
| Number of positions | 5 |
| No. of cable outlets | 1 |
| Shielded | yes |
| Coding | A |
| Cable outlet | angled |

### Insulation characteristics

| | |
|---|---|
| Overvoltage category | II |
| Degree of pollution | 3 |

## Dimensions

| | |
|---|---|
| Dimensional drawing | 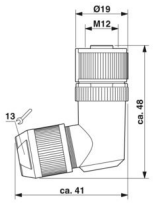  |
| Length | 48 mm |

### External dimensions

| | |
|---|---|
| Outside diameter | 4 mm ... 8 mm |

### Housing

| | |
|---|---|
| Diameter housing | 19 mm |

## Material specifications

| | |
|---|---|
| Material | TPE-U (Clamping cage, weight: 1.1 g) |
| | PA 6 (Actuation lever) |
| Flammability rating according to UL 94 | V0 |

| | |
|---|---|
| Seal material | NBR |
| Material of grip body | Zinc die-cast, nickel-plated |
| Contact material | CuSn |
| Contact surface material | Ni/Au |
| Contact carrier material | PA 6.6 |
| Material for screw connection | Zinc die-cast, nickel-plated |

## Connection data

### Conductor connection

| | |
|---|---|
| Connection method | Push-lock spring connection |
| Connection cross section | 0.14 mm² ... 0.75 mm² (without ferrule) |
| | 0.14 mm² ... 0.5 mm² (with ferrule) |
| Connection cross section AWG | 26 ... 18 (without ferrule) |
| | 26 ... 20 (with ferrule) |
| Stripping length of the individual wire | 7 mm |
| Tightening torque | 0.4 Nm (M12 knurl) |
| | 0.8 Nm (Connector with coupling sleeve) |
| | 3 Nm (Pressure nut with coupling sleeve) |

### Connection assignment

| | |
|---|---|
| Contact \| Color (signal designation) \| Contact (optional) | 1 = BN |
| | 2 = WH |
| | 3 = BU |
| | 4 = BK |
| | 5 = GY |

## Electrical properties

| | |
|---|---|
| Rated surge voltage | 1.5 kV |
| Contact resistance | ≤ 8 mΩ |
| Insulation resistance | ≥ 100 MΩ |
| Nominal voltage $U_N$ | 48 V AC |
| | 60 V DC |
| Nominal current $I_N$ | 4 A (2 A when using 0.14 mm² conductors) |

## Mechanical properties

### Mechanical data

| | |
|---|---|
| Insertion/withdrawal cycles | ≥ 100 |

## Connector

### Connection 1

| | |
|---|---|
| Head design | Socket |
| Head cable outlet | angled |
| Head thread type | M12 |

| | |
|---|---|
| Coding | A |

## Interfaces

| | |
|---|---|
| Signal type/category | Universal |

## Environmental and real-life conditions

### Ambient conditions

| | |
|---|---|
| Degree of protection | IP65 |
| | IP67 |
| Ambient temperature (operation) (male connector/female connector) | -40 °C ... 85 °C (Plug / socket) |

## Standards and regulations

| | |
|---|---|
| Standards/regulations | PA 6.6: Fire protection in rail vehicles - requirement sets R22, R23, R24, R25, and R26 acc. to DIN EN 45545-2 (Risk level HL1 - HL3) |
| | PA 6: Fire protection in rail vehicles - requirement sets R22, R23, and R24 acc. to DIN EN 45545-2 (Risk level HL1 - HL3) |

### M12

| | |
|---|---|
| Standard designation | M12 connector |
| Standards/specifications | IEC 61076-2-101 |
| Standard designation | Shock, vibration |
| Standards/specifications | EN 50155:2001 |

## Drawings

Dimensional drawing

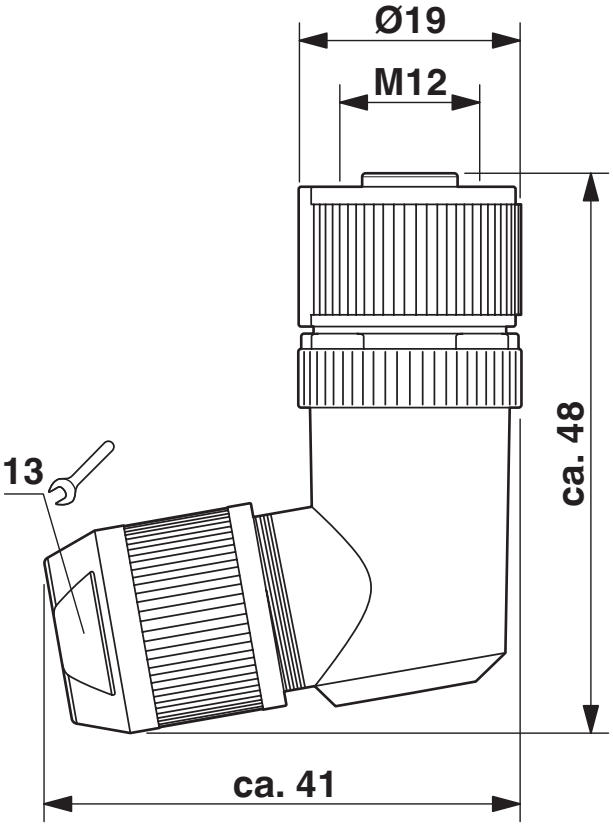


Socket M12-SPEEDCON, angled, shielded

Functional drawing

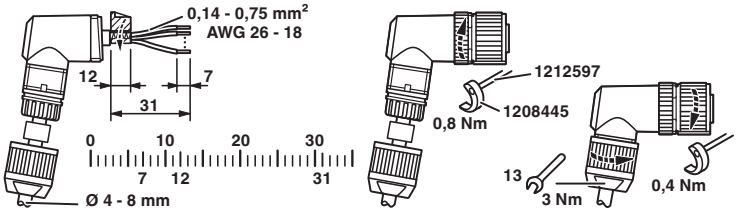


Slide the pressure nut and sleeve housing along the cable, strip the cable, shorten the shield, strip the single wires, connect the wires, in the case of a straight sleeve housing gently twist the wires together, stick the shielding foil around the shortened shield, in the case of a cable outside diameter < 6 mm stick an additional shielding foil around the wire pack, screw the sleeve housing to the plug insert, screw the pressure nut tight.

Schematic diagram

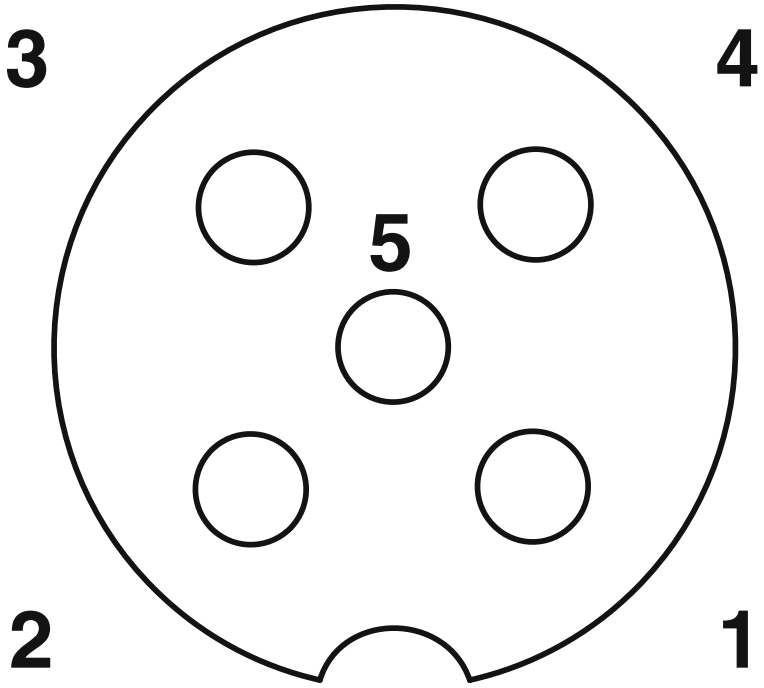


Pin assignment M12 socket, 5-pos., A-coded, socket side view

## Approvals

To download certificates, visit the product detail page: https://www.phoenixcontact.com/us/products/1424661

**UL Listed**
Approval ID: E221474

| | Nominal voltage $U_N$ | Nominal current $I_N$ | Cross section AWG | Cross section $mm^2$ |
|---|---|---|---|---|
| keine | | | | |
| | 60 V | 4 A | 26 - 18 | 26 - 18 |

**cUL Listed**
Approval ID: E221474

| | Nominal voltage $U_N$ | Nominal current $I_N$ | Cross section AWG | Cross section $mm^2$ |
|---|---|---|---|---|
| keine | | | | |
| | 60 V | 4 A | 26 - 18 | - |

## Classifications

### ECLASS

| | |
|---|---|
| ECLASS-13.0 | 27440116 |
| ECLASS-15.0 | 27440116 |

### ETIM

| | |
|---|---|
| ETIM 10.0 | EC002635 |

### UNSPSC

| | |
|---|---|
| UNSPSC 21.0 | 39121400 |

## Environmental product compliance

EU RoHS

| | |
|---|---|
| Fulfills EU RoHS substance requirements | Yes, No exemptions |

China RoHS

| | |
|---|---|
| Environment friendly use period (EFUP) | EFUP-E |
| | No hazardous substances above the limits |

EU REACH SVHC

| | |
|---|---|
| REACH candidate substance (CAS No.) | No substance above 0.1 wt% |

Phoenix Contact 2026 © - all rights reserved
https://www.phoenixcontact.com

Phoenix Contact USA
586 Fulling Mill Road
Middletown, PA 17057, United States
(+717) 944-1300
info@phoenixcon.com