HC-CIF-B10-HFWL-PL - DIN rail mounting frame

1424335

https://www.phoenixcontact.com/us/products/1424335

Please be informed that the data shown in this PDF document is generated from our online catalog. Please find the complete data in the user documentation. Our general terms of use for downloads are valid.



Commercial data

Item number	1424335
Packing unit	1 pc
Minimum order quantity	1 pc
Sales key	BF60
Product key	AF7AHB
GTIN	4055626370736
Weight per piece (including packing)	43.24 g
Weight per piece (excluding packing)	43.24 g
Customs tariff number	85389099
Country of origin	CN

Technical data

Notes

General	for B10, BB18, DD42, HV3 contact inserts and B10 module frame
Notes on safety	Protection against electric shock must be ensured by the user. The continuity of the PE connection must be verified and satisfied by the user. The PE connection must be implemented equilaterally.

Product properties

Product type	DIN rail mounting frame
Housing type	DIN rail mounting frame
Series	HC-CIF-PL
Type	B10
Protective cover	no
Pg screw connection	none

Dimensions

Dimensional drawing	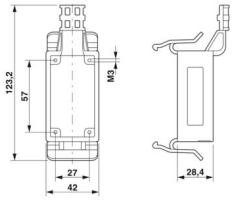
Width	42 mm
Height	61 mm
Length	125 mm

Material specifications

Material	PC
Flammability rating according to UL 94	V0

Mechanical properties

Mechanical data

Locking type	Clip

Environmental and real-life conditions

Ambient conditions

Ambient temperature (operation)	-40 °C ... 125 °C

Mounting

Assembly note	To ensure correct use, installation in an IP-protected space is required

Drawings

Dimensional drawing

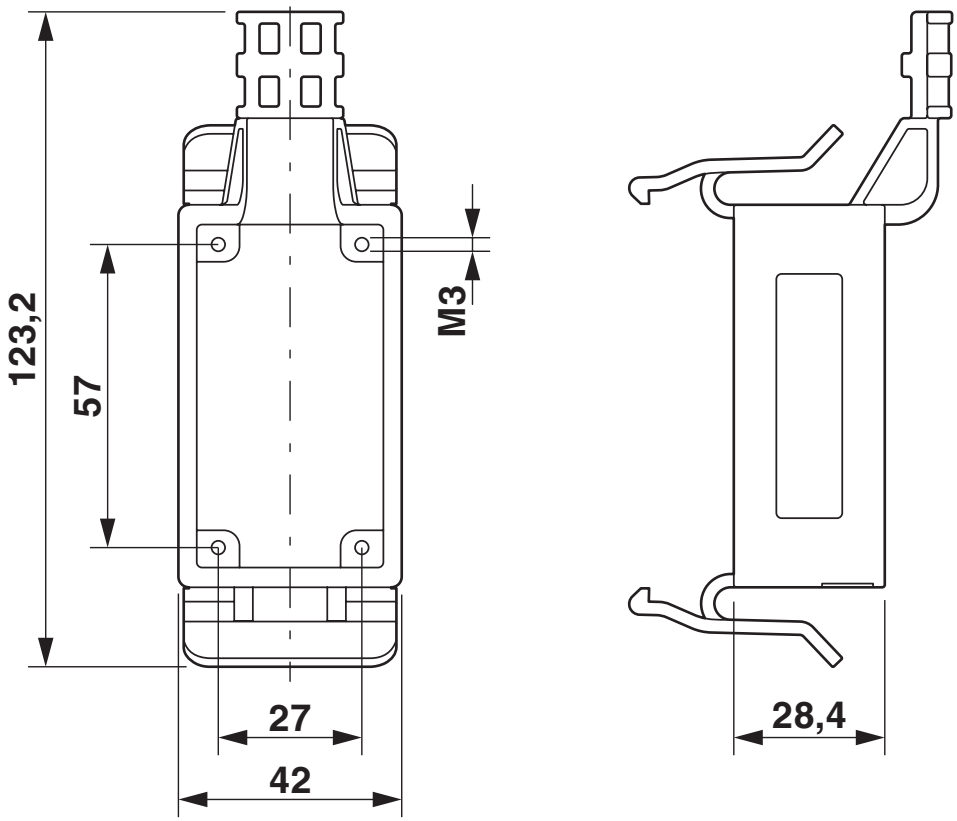

Dimensional drawing

Approvals

To download certificates, visit the product detail page: https://www.phoenixcontact.com/us/products/1424335

cUL Recognized
Approval ID: E118976

UL Recognized
Approval ID: E118976

Classifications

ECLASS

ECLASS-13.0	27440210
ECLASS-15.0	27440210

ETIM

ETIM 10.0	EC002310

UNSPSC

UNSPSC 21.0	39121400

Environmental product compliance

EU RoHS

Fulfills EU RoHS substance requirements	Yes, No exemptions

China RoHS

Environment friendly use period (EFUP)	EFUP-E
	No hazardous substances above the limits

EU REACH SVHC

REACH candidate substance (CAS No.)	No substance above 0.1 wt%

Phoenix Contact 2026 © - all rights reserved
https://www.phoenixcontact.com

Phoenix Contact USA
586 Fulling Mill Road
Middletown, PA 17057, United States
(+717) 944-1300
info@phoenixcon.com