HC-M-12-PT-M - Contact insert module

1424246

https://www.phoenixcontact.com/us/products/1424246

Please be informed that the data shown in this PDF document is generated from our online catalog. Please find the complete data in the user documentation. Our general terms of use for downloads are valid.



Contact insert module, number of positions: 12, power contacts: 0, control contacts: 12, Pin, Push-in connection, 250 V, 10 A, 0.14 mm^2 ... 1.5 mm^2, application: Signal

Your advantages

- Easy installation without tools, even when mounted, with push-in connection technology
- Shortest installation time compared to other connection technologies
- Quick and effortless wiring, in particular when space is tight
- Automatic cabling with robots possible
- Safe wiring and operation with color-coded actuators
- Shock and vibration-resistant in accordance with DIN EN 61373

Commercial data

Item number	1424246
Packing unit	1 pc
Minimum order quantity	1 pc
Sales key	BF62
Product key	AF7ACE
GTIN	4055626369600
Weight per piece (including packing)	22 g
Weight per piece (excluding packing)	21 g
Customs tariff number	85366990
Country of origin	PL

Technical data

Notes

General	only use flexible conductors with ferrules
General	Connectors may be operated only when there is no load/voltage.
General	For HEAVYCON housing type B6 to B48, HC-M-B...MF-... module carrier frame required

Mounting

Assembly note	To ensure correct use, installation in housing with IP54 protection or better is required

Product properties

Product type	Modular contact insert
Series	HC-M-12
Application	Signal
Number of positions	12
Connection profile	12
Contact numbering	1 - 12
Number of module slots	1
No. of power contacts	0
No. of control contacts	12
Contact material type	turned

Insulation characteristics

Overvoltage category	III
Degree of pollution	3

Connection data

Connection technology

Connection technology	Push-in connection

Conductor connection

Conductor cross-section	0.14 mm² ... 1.5 mm²
Connection cross section AWG	26 ... 16
Stripping length of the individual wire	8 mm

Dimensions

Dimensional drawing	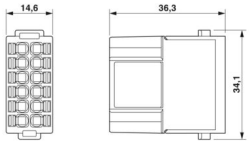
Width	34.1 mm

Height	36.3 mm
Length	14.6 mm

Mechanical characteristics

Contact diameter	1.6 mm

Electrical properties

Rated voltage (III/2) contacts	400 V
Rated voltage (III/3)	250 V
Rated surge voltage (III/2)	4 kV
Rated surge voltage (III/3)	4 kV
Rated surge voltage	4 kV
Rated current	10 A

Mechanical properties

Mechanical data

Insertion/withdrawal cycles	≥ 500

Material specifications

Flammability rating according to UL 94	V0
Contact material	Copper alloy
Contact surface material	Ag
Contact carrier material	PC

Environmental and real-life conditions

Ambient conditions

Ambient temperature (operation)	-40 °C ... 125 °C

Standards and regulations

Standards/regulations	PC: Fire protection in rail vehicles - requirement sets R22, R23, and R24 acc. to DIN EN 45545-2 (Risk level HL1 - HL3)

Drawings

Dimensional drawing

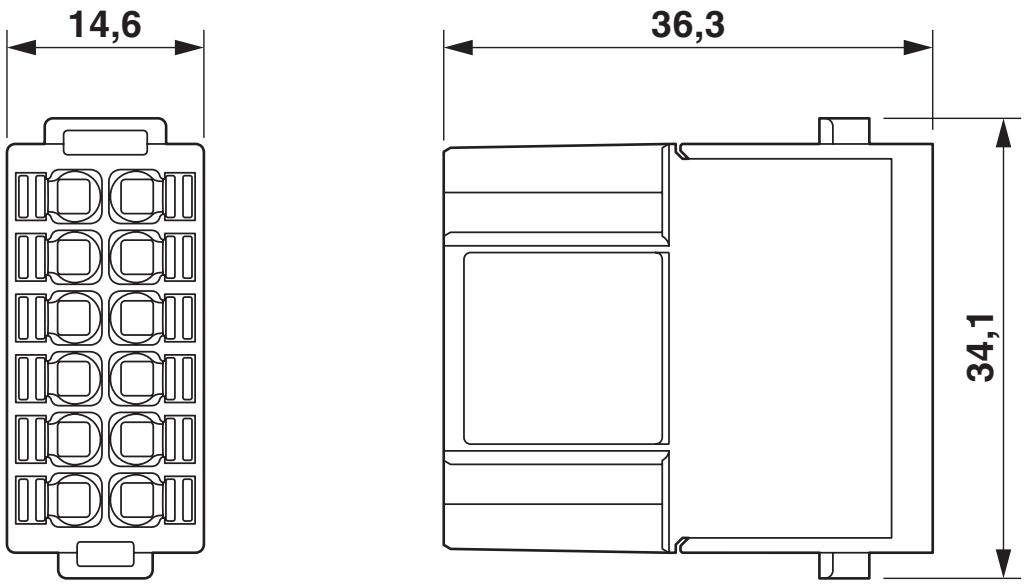

Dimensional drawing

Schematic diagram

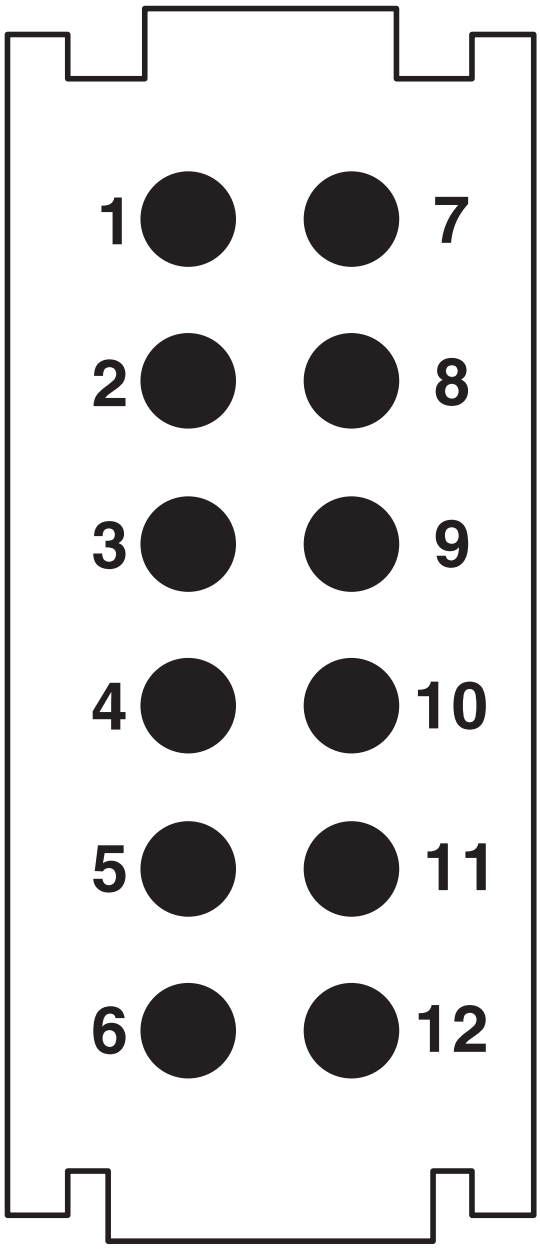

Connector pin assignment, connection side

Diagram

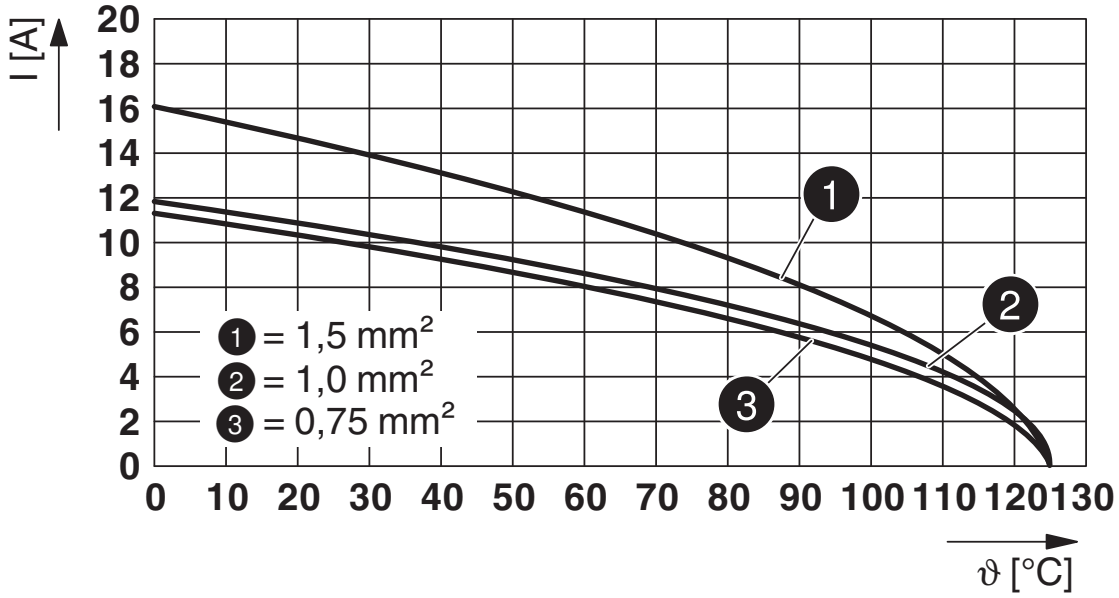

Derating diagram

Approvals

To download certificates, visit the product detail page: https://www.phoenixcontact.com/us/products/1424246

UL Recognized Approval ID: E118976				
	Nominal voltage U_N	Nominal current I_N	Cross section AWG	Cross section mm^2
keine				
	600 V	10 A	- 16	-

UL Recognized Approval ID: E468743				
	Nominal voltage U_N	Nominal current I_N	Cross section AWG	Cross section mm^2
keine				
	600 V	10 A	-	-

cUL Recognized Approval ID: E468743				
	Nominal voltage U_N	Nominal current I_N	Cross section AWG	Cross section mm^2
keine				
	600 V	10 A	- 16	-

Classifications

ECLASS

ECLASS-13.0	27440217
ECLASS-15.0	27440217

ETIM

ETIM 10.0	EC000438

UNSPSC

UNSPSC 21.0	39121400

Environmental product compliance

EU RoHS

Fulfills EU RoHS substance requirements	Yes, No exemptions

China RoHS

Environment friendly use period (EFUP)	EFUP-E
	No hazardous substances above the limits

EU REACH SVHC

REACH candidate substance (CAS No.)	No substance above 0.1 wt%

EF3.1 Climate Change

CO2e kg	1.015 kg CO2e

Phoenix Contact 2026 © - all rights reserved
https://www.phoenixcontact.com

Phoenix Contact USA
586 Fulling Mill Road
Middletown, PA 17057, United States
(+717) 944-1300
info@phoenixcon.com