SACC-M12MSX-8CT-CL SH - Data connector

1422844

https://www.phoenixcontact.com/us/products/1422844

Please be informed that the data shown in this PDF document is generated from our online catalog. Please find the complete data in the user documentation. Our general terms of use for downloads are valid.



Data connector, Ethernet CAT6$_A$ (10 Gbps), PROFINET CAT6$_A$ (10 Gbps), 8-position, shielded, Plug straight M12, coding: X, Crimp connection, knurl material: Zinc die-cast, tin-plated, external cable diameter 6.5 mm ... 10 mm, without crimp contacts

Your advantages

- Extremely compact, thanks to the small wiring space and high contact density
- Safe use in the field, thanks to a high degree of protection
- Safely shielded: reliable shield connection even under extreme mechanical strain
- Robust connection: suitable for railway applications with high shock and vibration loads

Commercial data

Item number	1422844
Packing unit	1 pc
Minimum order quantity	1 pc
Sales key	BF34
Product key	AF2CJJ
GTIN	4055626381886
Weight per piece (including packing)	23 g
Weight per piece (excluding packing)	22.7 g
Customs tariff number	85366990
Country of origin	DE

Technical data

Notes

General	This product corresponds to the PROFINET Cabling and Interconnection Technology Guideline for PROFINET regulations, version 2.00, order no: 2.252, Chapter 8.2 Connectors for Outside Environment (Balanced cabling)
Assembly note	NOTE: Observe the permissible bending radii when routing cables, since the degree of protection may be at risk if the bending forces are too high. Reduce mechanical loads upstream of the connector, e.g., by using cable ties.

Mounting

Assembly note	Contacts can be clipped in place and unclipped without tools

Product properties

Product type	Circular connector (cable-side)
Application	Data
Number of positions	8
No. of cable outlets	1
Shielded	yes
Coding	X
Cable outlet	straight

Insulation characteristics

Overvoltage category	II
Degree of pollution	3

Dimensions

Dimensional drawing	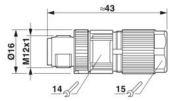
Length	43 mm
Wrench size, union nut	15 mm
Wrench size, counter nut	14 mm

External dimensions

Outside diameter	6.5 mm ... 10 mm

Housing

Diameter housing	16 mm

Material specifications

Flammability rating according to UL 94	V0
Seal material	FKM

Material of grip body	Zinc die-cast, nickel-plated
Contact carrier material	PA 6.6
Material for screw connection	Zinc die-cast, tin-plated

Connection data

Conductor connection

Connection method	Crimp connection
Connection cross section	0.14 mm² ... 0.34 mm² (flexible)
Connection cross section AWG	26 ... 22 (flexible)
Stripping length of the individual wire	4 mm +0,5 mm
Tightening torque	0.4 Nm (M12 knurl)
	4 Nm (Pressure nut with coupling sleeve)

Connection assignment

Contact | Color (signal designation) | Contact (optional)	1 = WHOG (D1+)
	2 = OG (D1-)
	3 = WHGN (D2+)
	4 = GN (D2-)
	5 = WHBN (D4+)
	6 = BN (D4-)
	7 = WHBU (D3-)
	8 = BU (D3+)

Electrical properties

Rated surge voltage	0.8 kV
Insulation resistance	≥ 100 MΩ
Nominal voltage U_N	48 V AC
	60 V DC
Nominal current I_N	0.5 A
Transmission speed	10 Gbps

Mechanical properties

Mechanical data

Insertion/withdrawal cycles	≥ 100

Connector

Connection 1

Head design	Plug
Head cable outlet	straight
Head thread type	M12
Coding	X

Interfaces

Signal type/category	Ethernet $CAT6_A$ (IEC 11801), 10 Gbps

	PROFINET CAT6$_A$ (IEC 11801), 10 Gbps

Environmental and real-life conditions

Ambient conditions

Degree of protection	IP65
	IP67
Ambient temperature (operation) (male connector/female connector)	-40 °C ... 85 °C (Plug / socket)
Ambient temperature (assembly)	-5 °C ... 50 °C

Standards and regulations

Standards/regulations	PA 6.6: Fire protection in rail vehicles - requirement sets R22, R23, R24, and R26 acc. to DIN EN 45545-2 (Risk level HL1 - HL3)

M12

Standard designation	M12 connector
Standards/specifications	IEC 61076-2-109
Standard designation	Shock, vibration
Standards/specifications	EN 50155:2001

Drawings

Dimensional drawing

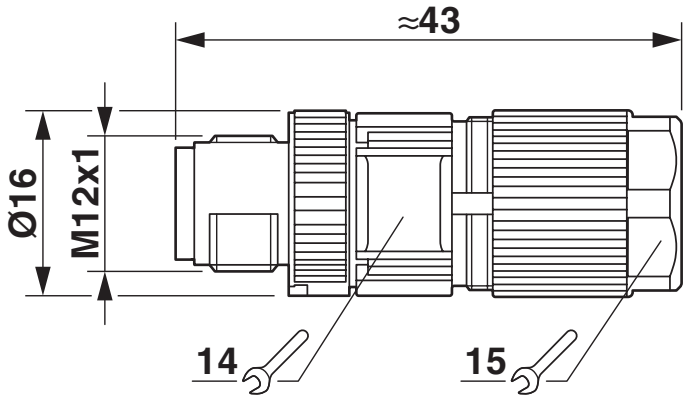

Plug, M12 x 1, straight, shielded

Functional drawing

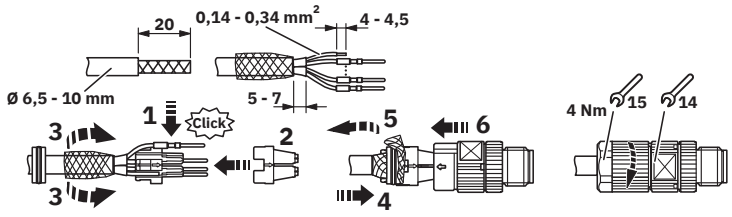

Schematic diagram

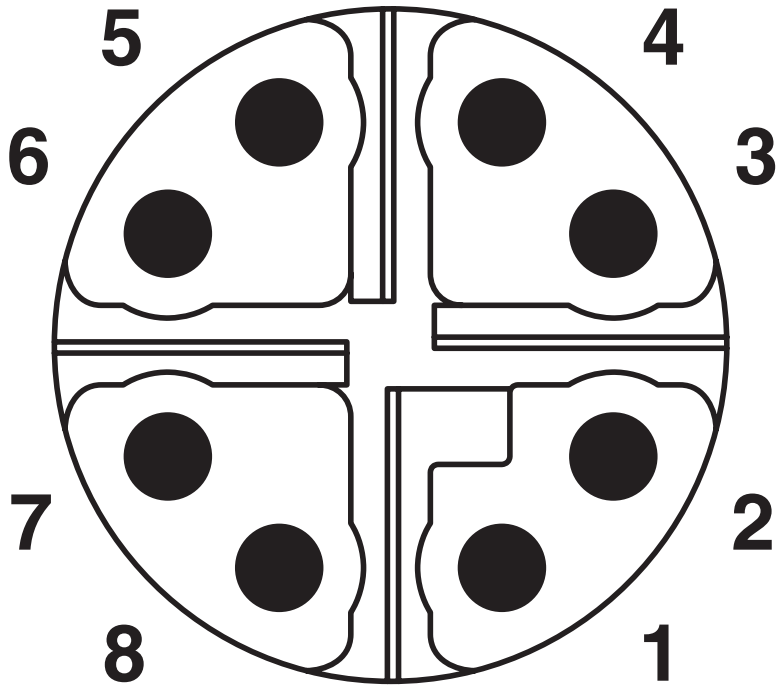

Pin assignment M12 plug, 8-pos., view plug side

Approvals

To download certificates, visit the product detail page: https://www.phoenixcontact.com/us/products/1422844

UL Listed
Approval ID: E335024

cUL Listed
Approval ID: E335024

Classifications

ECLASS

ECLASS-13.0	27440116
ECLASS-15.0	27440116

ETIM

ETIM 10.0	EC002635

UNSPSC

UNSPSC 21.0	39121400

Environmental product compliance

EU RoHS

Fulfills EU RoHS substance requirements	Yes, No exemptions

China RoHS

Environment friendly use period (EFUP)	EFUP-E
	No hazardous substances above the limits

EU REACH SVHC

REACH candidate substance (CAS No.)	No substance above 0.1 wt%

Phoenix Contact 2026 © - all rights reserved
https://www.phoenixcontact.com

Phoenix Contact USA
586 Fulling Mill Road
Middletown, PA 17057, United States
(+717) 944-1300
info@phoenixcon.com