SAC-5PY-F/M-F VP SH - Y distributor

1419933

https://www.phoenixcontact.com/us/products/1419933

Please be informed that the data shown in this PDF document is generated from our online catalog. Please find the complete data in the user documentation. Our general terms of use for downloads are valid.



Y distributor, 5-position, shielded, Socket straight M12 SPEEDCON, coding: A, on Socket straight M12 SPEEDCON, coding: A and Plug straight M12 SPEEDCON, coding: A, Parallel distributor

Your advantages

- Reliable signal transmission – 360° shielding in environments with electromagnetic interference
- Save time, thanks to installation with SPEEDCON fast locking system

Commercial data

Item number	1419933
Packing unit	5 pc
Minimum order quantity	1 pc
Sales key	BF10
Product key	AF1GAC
GTIN	4046356528450
Weight per piece (including packing)	46.4 g
Weight per piece (excluding packing)	46 g
Customs tariff number	85366990
Country of origin	PL

Technical data

Product properties

Product type	Y-distributor
Number of positions	5
No. of cable outlets	2
Shielded	yes
Coding	A
Thread type	M12

Insulation characteristics

Overvoltage category	II
Degree of pollution	3

Electrical properties

Insulation resistance	≥ 100 MΩ
Nominal voltage U_N	48 V AC
	60 V DC
Nominal current I_N	4 A

Signaling

Status display	no
Status display present	no

Dimensions

Dimensional drawing	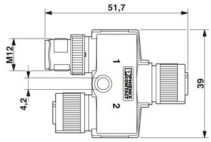
Width	39 mm
Height	16 mm
Length	51.7 mm
Center distance	21 mm

Material specifications

Flammability rating according to UL 94	HB
Seal material	NBR
Material of grip body	TPU, hardly inflammable, self-extinguishing
Contact material	CuZn
Contact surface material	Ni/Au
Contact carrier material	TPU GF
Material for screw connection	Zinc die-cast, nickel-plated

Connector

Connection 1

Type	Socket straight M12 SPEEDCON
Locking type	SPEEDCON
Coding type	A

Connection 2

Type	Socket straight M12 SPEEDCON
Locking type	SPEEDCON
Coding type	A

Connection 3

Type	Plug straight M12 SPEEDCON
Locking type	SPEEDCON
Coding type	A

Mechanical properties

Mechanical data

Insertion/withdrawal cycles	≥ 100

Environmental and real-life conditions

Ambient conditions

Degree of protection	IP65 IP67
Ambient temperature (operation) (male connector/female connector)	-25 °C ... 90 °C (Plug / socket)

Standards and regulations

Standard designation	M12 connector
Standards/specifications	IEC 61076-2-101

Drawings

Dimensional drawing

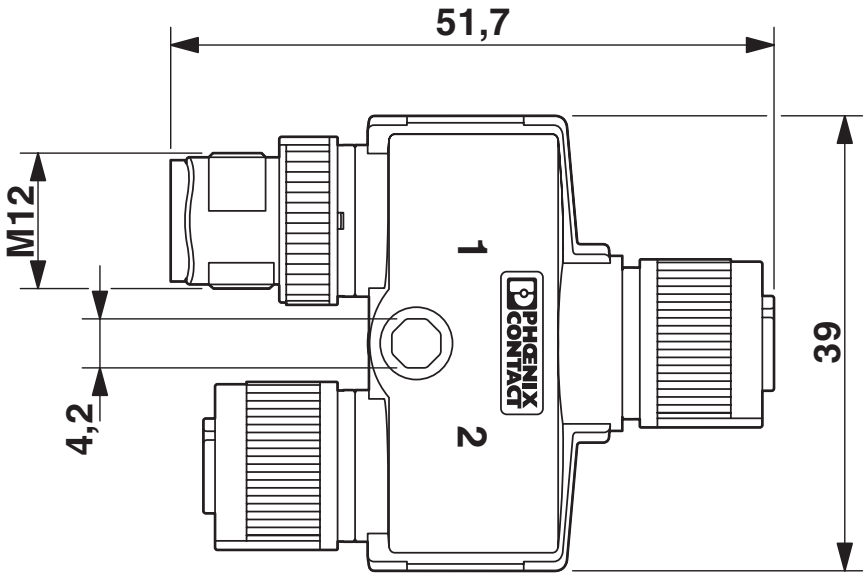

M12 Y distributor

Schematic diagram

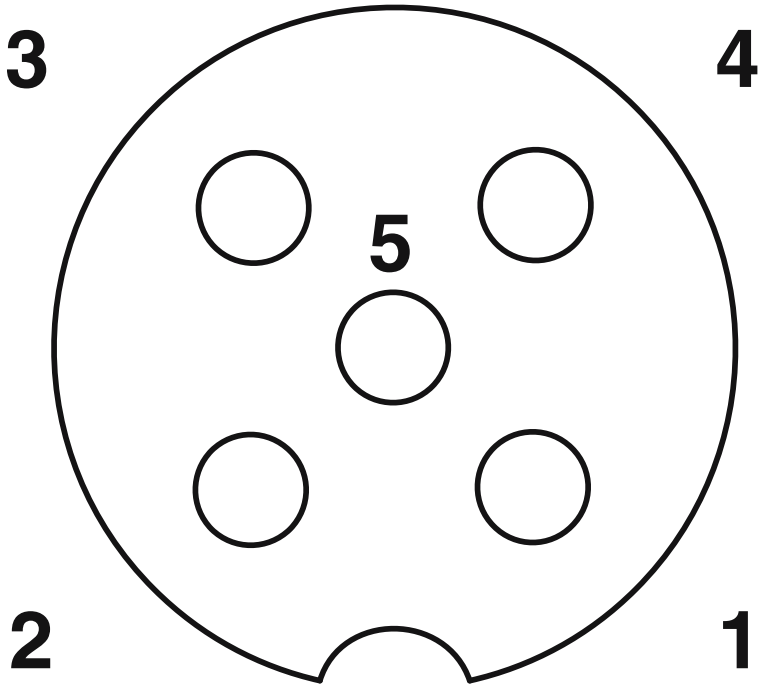

Pin assignment M12 socket, 5-pos., A-coded, socket side view

Schematic diagram

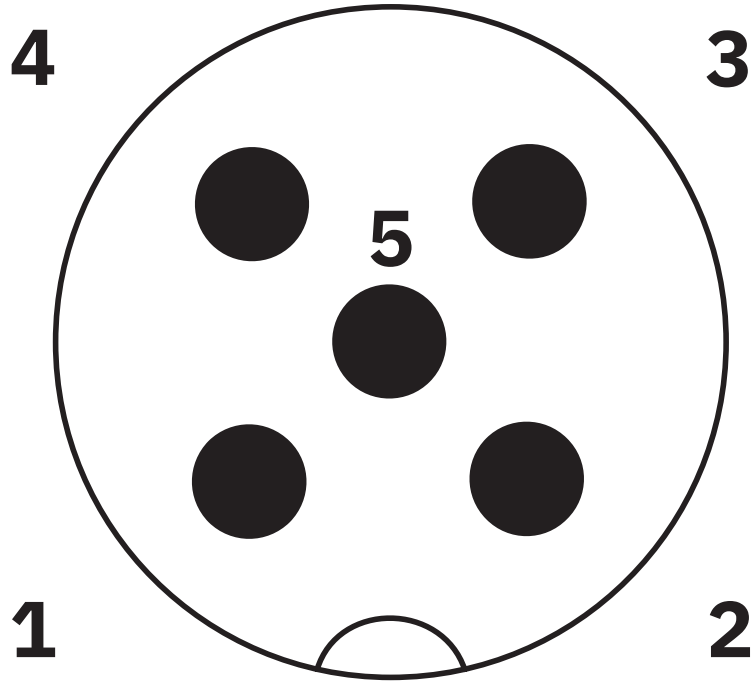

Pin assignment M12 male connector, 5-pos., A-coded, male side

Circuit diagram

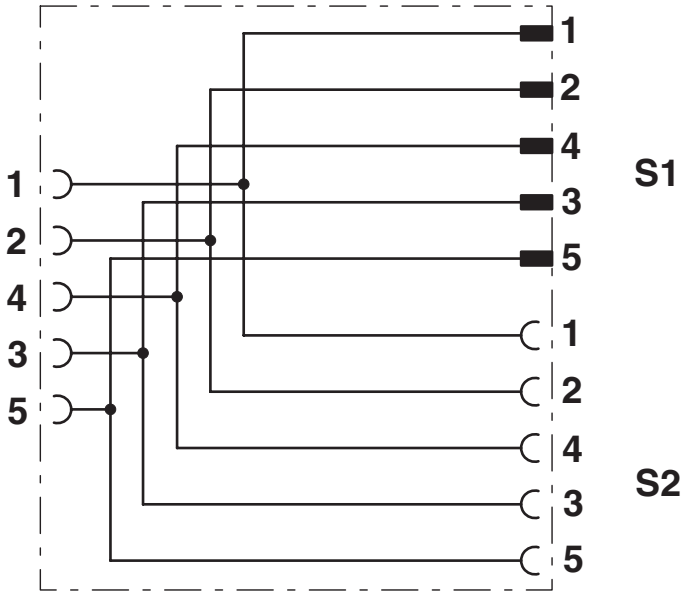

Contact assignment of the M12 Y distributor

Classifications

ECLASS

ECLASS-13.0	27440106
ECLASS-15.0	27440106

ETIM

ETIM 10.0	EC002925

UNSPSC

UNSPSC 21.0	31251500

Environmental product compliance

EU RoHS

Fulfills EU RoHS substance requirements	Yes, No exemptions

China RoHS

Environment friendly use period (EFUP)	EFUP-E
	No hazardous substances above the limits

EU REACH SVHC

REACH candidate substance (CAS No.)	No substance above 0.1 wt%

EF3.1 Climate Change

CO2e kg	1.646 kg CO2e

Phoenix Contact 2026 © - all rights reserved
https://www.phoenixcontact.com

Phoenix Contact USA
586 Fulling Mill Road
Middletown, PA 17057, United States
(+717) 944-1300
info@phoenixcon.com