HC-STA-D07-HHFS-1TGM25-PL-BK - Housing

1419256

https://www.phoenixcontact.com/us/products/1419256

Please be informed that the data shown in this PDF document is generated from our online catalog. Please find the complete data in the user documentation. Our general terms of use for downloads are valid.



Sleeve housing D7, for single locking latch, material: PA, cable outlets: 1, straight, M25, height: 81.8 mm, cable gland: with, Standard

Commercial data

Item number	1419256
Packing unit	1 pc
Minimum order quantity	1 pc
Sales key	BF56
Product key	AF7APD
GTIN	4055626159973
Weight per piece (including packing)	31.5 g
Weight per piece (excluding packing)	30.9 g
Customs tariff number	85389099
Country of origin	CN

Technical data

Notes

General	for contact inserts HC-A03, A04, D07, D08, Q02, Q03, Q04, Q05, Q07, Q12

Product properties

Product type	Housing with locking latch
Housing type	Sleeve housing
Product family	HC-STA-D07
Application	Standard
Type	D7
No. of cable outlets	1
Type of the screw connection	M25
Shielded	no
Cable outlet	straight
Pg screw connection	with

Dimensions

Dimensional drawing	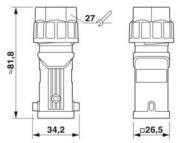
Width	34.2 mm
Height	81.8 mm
Length	26.5 mm
Wrench size, union nut	27 mm

Material specifications

Flammability rating according to UL 94	V0 (Housing)
Housing material	PA
Locking latch material	PA

Mechanical properties

Mechanical data

Type of the screw connection	M25
Locking type	Pin

Cable/line

External cable diameter Cable 1	10 mm ... 16 mm

Connection data

External cable diameter	10 mm ... 16 mm

Tightening torque	5 Nm (Cap nut)

Environmental and real-life conditions

Ambient conditions

Degree of protection	IP66
Enclosure rating (NEMA)	4 (UL)
	4X (UL)
Impact strength	IK06
Ambient temperature (operation)	-40 °C ... 125 °C

Drawings

Dimensional drawing

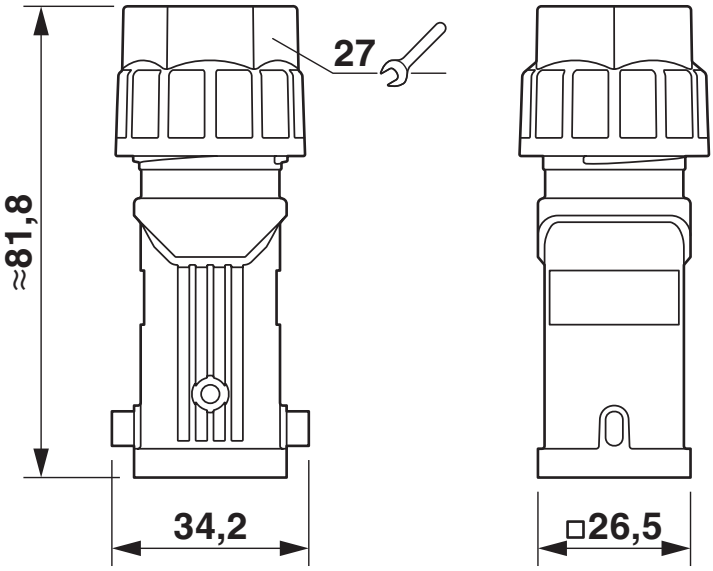

Dimensional drawing

Approvals

To download certificates, visit the product detail page: https://www.phoenixcontact.com/us/products/1419256

DNV
Approval ID: TAE000037S

cULus Recognized
Approval ID: E468743

Classifications

ECLASS

ECLASS-13.0	27440202
ECLASS-15.0	27440202

ETIM

ETIM 10.0	EC000437

UNSPSC

UNSPSC 21.0	31261500

Environmental product compliance

EU RoHS

Fulfills EU RoHS substance requirements	Yes, No exemptions

China RoHS

Environment friendly use period (EFUP)	EFUP-E
	No hazardous substances above the limits

EU REACH SVHC

REACH candidate substance (CAS No.)	No substance above 0.1 wt%

Phoenix Contact 2026 © - all rights reserved
https://www.phoenixcontact.com

Phoenix Contact USA
586 Fulling Mill Road
Middletown, PA 17057, United States
(+717) 944-1300
info@phoenixcon.com