# HC-Q07-I-CT-M - Contact insert

1418624

https://www.phoenixcontact.com/us/products/1418624

Please be informed that the data shown in this PDF document is generated from our online catalog. Please find the complete data in the user documentation. Our general terms of use for downloads are valid.



Contact insert, number of positions: 7+PE, size: D7, number of connections per position: 1, Pin, Crimp connection, 400 V, 12 A, 0.14 $mm^2$ ... 2.5 $mm^2$

## Your advantages

- Contact insert including IP65 sealing screw
- Shock and vibration-resistant in accordance with DIN EN 61373

## Commercial data

| | |
|---|---|
| Item number | 1418624 |
| Packing unit | 1 pc |
| Minimum order quantity | 1 pc |
| Sales key | BF61 |
| Product key | AF7ABJ |
| GTIN | 4055626249377 |
| Weight per piece (including packing) | 17 g |
| Weight per piece (excluding packing) | 16 g |
| Customs tariff number | 85389099 |
| Country of origin | CN |

## Technical data

### Notes

| | |
|---|---|
| General | For HC-D7 housing, crimp contacts CK1,6-ED (crimp contacts not included in scope of supply) |
| General | Connectors may be operated only when there is no load/voltage. |

### Mounting

| | |
|---|---|
| Assembly note | To ensure correct use, installation in housing with IP54 protection or better is required |
| | Four different coding options to prevent mismatching. |
| | Contact insert including IP67 sealing screw. |

### Product properties

| | |
|---|---|
| Product type | Contact insert with a fixed no. of positions |
| Series | HC-Q |
| Type | D7 |
| Number of positions | 7 |
| Connection profile | 7+PE |
| Contact numbering | 1 - 7 |
| Number of connections per position | 1 |
| Contact material type | turned |
| | rolled |

#### Insulation characteristics

| | |
|---|---|
| Overvoltage category | III |
| Degree of pollution | 3 |

### Dimensions

| | |
|---|---|
| Dimensional drawing | 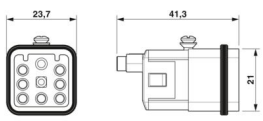  |
| Width | 21 mm |
| Height | 39.5 mm |
| Length | 21 mm |

#### Mechanical characteristics

| | |
|---|---|
| Contact diameter | 1.6 mm |

### Connection data

#### Connection technology

| | |
|---|---|
| Connection technology | Crimp connection |

| | |
|---|---|
| | PE connection |
| Number of connections per position | 1 |
| Connection in acc. with standard | IEC / EN |

Conductor connection

| | |
|---|---|
| Conductor cross-section | 0.14 mm² ... 2.5 mm² |
| Connection cross section AWG | 26 ... 14 |
| Tightening torque | 0.5 Nm ... 0.8 Nm (Mounting screws for mounting in the HEAVYCON housing) |
| Stripping length of the individual wire | 8 mm |
| | 6 mm (2.5 mm²) |

## Electrical properties

| | |
|---|---|
| Rated voltage (III/3) | 400 V |
| Rated surge voltage | 6 kV |
| Rated current | 12 A |
| Test voltage | 6 kV |

## Mechanical properties

Mechanical data

| | |
|---|---|
| Insertion/withdrawal cycles | ≥ 500 |

## Material specifications

| | |
|---|---|
| Flammability rating according to UL 94 | V0 |
| Seal material | NBR, conductive |
| Contact material | Copper alloy |
| Contact surface material | Ag (alternatively Au) |
| Contact carrier material | PC |

## Environmental and real-life conditions

Ambient conditions

| | |
|---|---|
| Ambient temperature (operation) | -40 °C ... 125 °C (including heating up of contacts) |

## Standards and regulations

| | |
|---|---|
| Constructional and testing regulations | DIN VDE 0627/86 |
| | DIN VDE 0110/02.79 |
| | DIN VDE 0110-1/04.97 |
| | IEC 60664-1, DIN IEC 60512 |
| | IEC 60352 |
| Tests | DIN VDE 0627/86 |
| | DIN VDE 0110/02.79 |
| | DIN VDE 0110-1/04.97 |
| | IEC 60664-1, DIN IEC 60512 |
| | IEC 60352 |

| | |
|---|---|
| Standards/regulations | PC: Fire protection in rail vehicles - requirement sets R22, R23, and R24 acc. to DIN EN 45545-2 (Risk level HL1 - HL3) |

## Drawings

Dimensional drawing

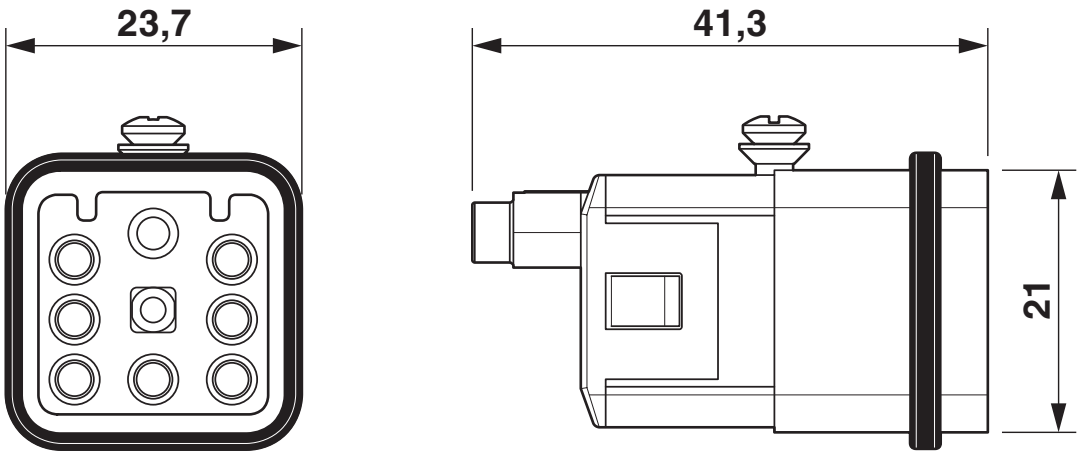


Male insert (turned contacts)

Schematic diagram

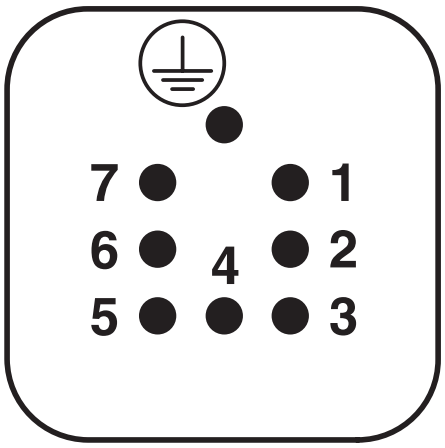


Connector pin assignment (connection side)

Diagram

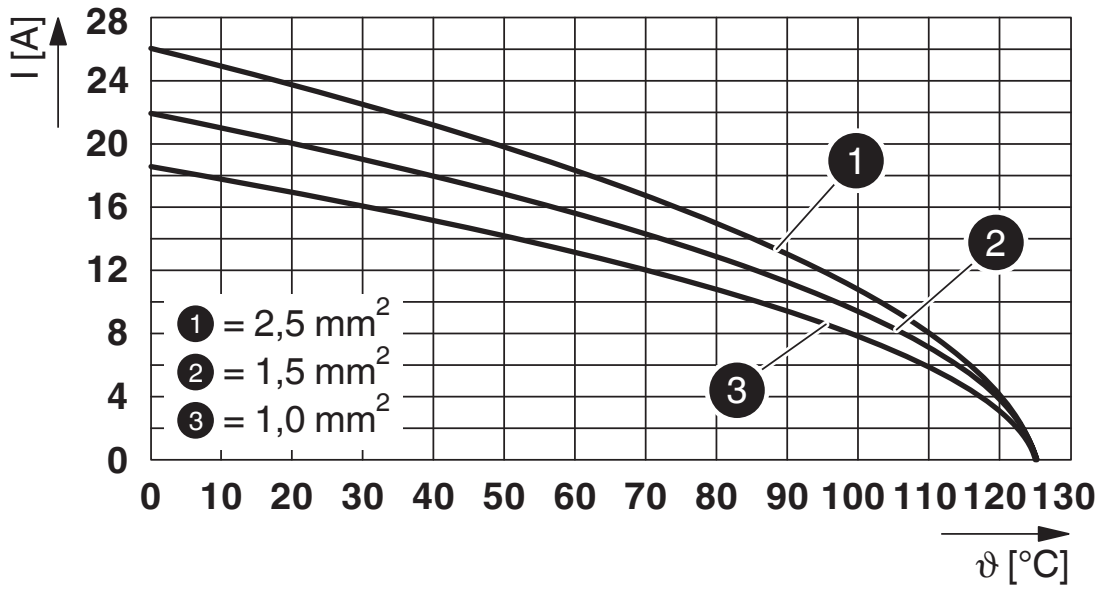


Derating diagram turned contacts

Diagram

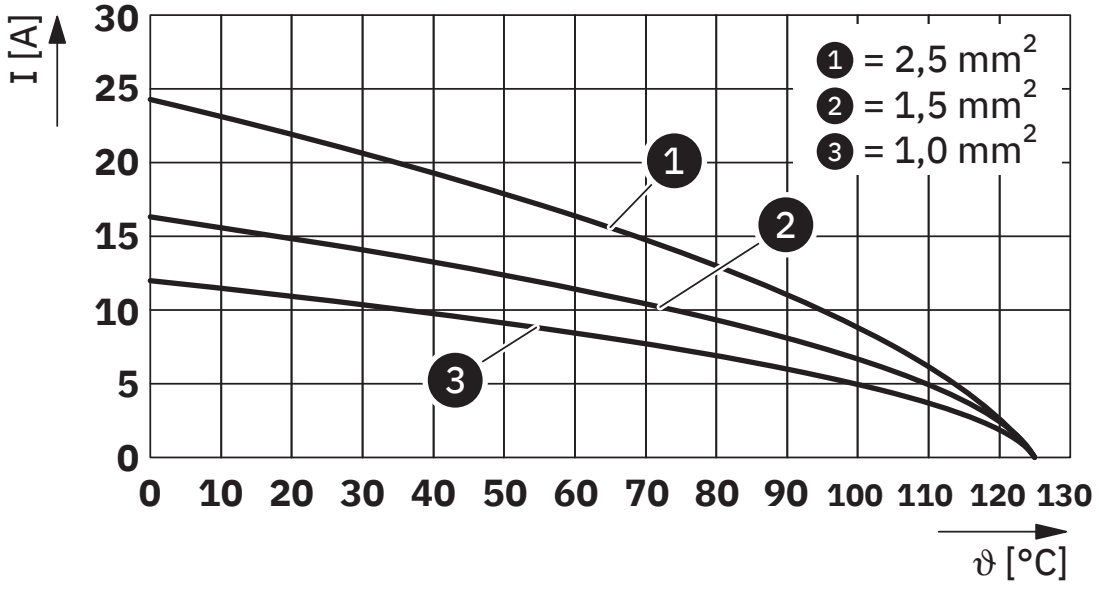


Derating diagram rolled contacts

## Approvals

To download certificates, visit the product detail page: https://www.phoenixcontact.com/us/products/1418624

**DNV**
Approval ID: TAE000037S

**CSA**
Approval ID: 158887

| | Nominal voltage $U_N$ | Nominal current $I_N$ | Cross section AWG | Cross section $mm^2$ |
|---|---|---|---|---|
| keine | | | | |
| | 600 V | 13.5 A | - 14 | - |

**UL Recognized**
Approval ID: E118976

| | Nominal voltage $U_N$ | Nominal current $I_N$ | Cross section AWG | Cross section $mm^2$ |
|---|---|---|---|---|
| keine | | | | |
| | 600 V | 17.5 A | - 14 | - |

**UL Recognized**
Approval ID: E468743

| | Nominal voltage $U_N$ | Nominal current $I_N$ | Cross section AWG | Cross section $mm^2$ |
|---|---|---|---|---|
| keine | | | | |
| | 600 V | 15 A | - | - |

## Classifications

### ECLASS

| | |
|---|---|
| ECLASS-13.0 | 27440205 |
| ECLASS-15.0 | 27440205 |

### ETIM

| | |
|---|---|
| ETIM 10.0 | EC000438 |

### UNSPSC

| | |
|---|---|
| UNSPSC 21.0 | 39121500 |

## Environmental product compliance

EU RoHS

| | |
|---|---|
| Fulfills EU RoHS substance requirements | Yes, No exemptions |

China RoHS

| | |
|---|---|
| Environment friendly use period (EFUP) | EFUP-E |
| | No hazardous substances above the limits |

EU REACH SVHC

| | |
|---|---|
| REACH candidate substance (CAS No.) | No substance above 0.1 wt% |


Phoenix Contact 2026 © - all rights reserved
https://www.phoenixcontact.com



Phoenix Contact USA
586 Fulling Mill Road
Middletown, PA 17057, United States
(+717) 944-1300
info@phoenixcon.com