HC-M-02-PN-M-F - Contact insert module

1417434

https://www.phoenixcontact.com/us/products/1417434

Please be informed that the data shown in this PDF document is generated from our online catalog. Please find the complete data in the user documentation. Our general terms of use for downloads are valid.



Contact insert module, number of positions: 2, Socket, Pin, application: Pneumatics, for internal hose diameter of 6 mm

Commercial data

Item number	1417434
Packing unit	5 pc
Minimum order quantity	1 pc
Sales key	BF62
Product key	AF7ACE
GTIN	4055626112954
Weight per piece (including packing)	5.76 g
Weight per piece (excluding packing)	5.68 g
Customs tariff number	85389099
Country of origin	PL

Technical data

Notes

General	For HEAVYCON ADVANCE housing type B6 to B24 and HEAVYCON housing type B6 to B48. HEAVYCON HC-M-B...-MF... module carrier frame required, HC-M-PN... pneumatic pins and sockets are not supplied as standard.
General	Connectors may be operated only when there is no load/voltage.
General	The use of guide pins (HC-CST) and sockets (HC-CBU) is recommended to prevent tip collision due to misalignment.

Product properties

Product type	Pneumatic insert, modular
Series	HC-M-02-PN
Application	Pneumatics
Number of positions	2
Connection profile	2
Contact numbering	1 - 2
Number of module slots	1
Integrated valve	No

Dimensions

Dimensional drawing	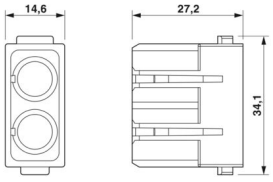
Width	34.2 mm
Height	27.2 mm
Length	14.6 mm

Mechanical characteristics

Internal diameter of pressure hose connection	6 mm
Contact diameter	8 mm

Material specifications

Flammability rating according to UL 94	V0
Contact carrier material	PC

Mechanical properties

Mechanical data

Insertion/withdrawal cycles	≥ 500

Environmental and real-life conditions

Ambient conditions

Ambient temperature (operation)	-40 °C ... 80 °C

Standards and regulations

Standards/regulations	PC: Fire protection in rail vehicles - requirement sets R22, R23, and R24 acc. to DIN EN 45545-2 (Risk level HL1 - HL3)

Mounting

Assembly note	To ensure correct use, installation in housing with IP54 protection or better is required
	- Snap the pneumatic contact and module together. Insert the contact into the module from the front - Place the modules assembled with the contacts in the module carrier frame. - The pneumatic tubes are pushed onto the pneumatic contact from the back of the module. The medium-sized module slots and sleeves/coupling housing with straight cable outlet direction are recommended.

Drawings

Dimensional drawing

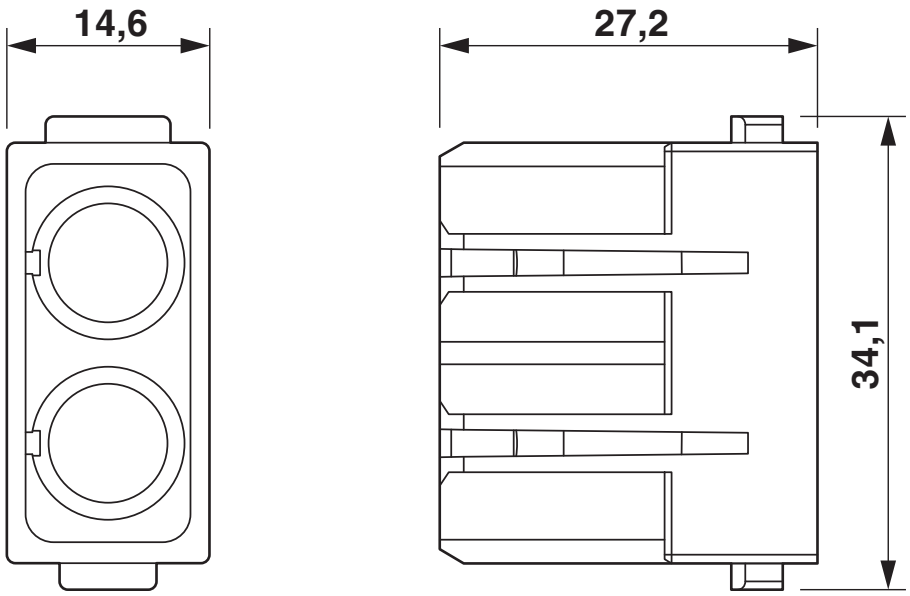

Approvals

To download certificates, visit the product detail page: https://www.phoenixcontact.com/us/products/1417434

CSA
Approval ID: 158887

UL Recognized
Approval ID: E118976

Classifications

ECLASS

ECLASS-13.0	27440220
ECLASS-15.0	27440220

ETIM

ETIM 10.0	EC000438

UNSPSC

UNSPSC 21.0	39121400

Environmental product compliance

EU RoHS

Fulfills EU RoHS substance requirements	Yes, No exemptions

China RoHS

Environment friendly use period (EFUP)	EFUP-E
	No hazardous substances above the limits

EU REACH SVHC

REACH candidate substance (CAS No.)	No substance above 0.1 wt%

EF3.1 Climate Change

CO2e kg	0.03 kg CO2e

Phoenix Contact 2026 © - all rights reserved
https://www.phoenixcontact.com

Phoenix Contact USA
586 Fulling Mill Road
Middletown, PA 17057, United States
(+717) 944-1300
info@phoenixcon.com