VS-08-M12MS-10G-P SCO - Data connector

1417430

https://www.phoenixcontact.com/us/products/1417430

Please be informed that the data shown in this PDF document is generated from our online catalog. Please find the complete data in the user documentation. Our general terms of use for downloads are valid.



Data connector, Ethernet CAT6$_A$ (10 Gbps), 8-position, shielded, Plug straight M12 SPEEDCON, coding: X, Piercecon® fast connection, knurl material: Zinc die-cast, nickel-plated, external cable diameter 4 mm ... 8 mm

Your advantages

- Safe use in the field, thanks to a high degree of protection
- Save time, thanks to installation with SPEEDCON fast locking system
- Reliable signal transmission – 360° shielding in environments with electromagnetic interference

Commercial data

Item number	1417430
Packing unit	1 pc
Minimum order quantity	1 pc
Sales key	BF32
Product key	AF2CHJ
GTIN	4046356530699
Weight per piece (including packing)	30.8 g
Weight per piece (excluding packing)	29.7 g
Customs tariff number	85366990
Country of origin	DE

Technical data

Notes

Assembly note	NOTE: Observe the permissible bending radii when routing cables, since the degree of protection may be at risk if the bending forces are too high. Reduce mechanical loads upstream of the connector, e.g., by using cable ties.

Product properties

Product type	Circular connector (cable-side)
Application	Data
Number of positions	8
No. of cable outlets	1
Shielded	yes
Coding	X

Insulation characteristics

Overvoltage category	II
Degree of pollution	3

Dimensions

Dimensional drawing	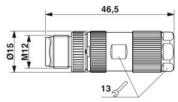
Length	46.5 mm
Wrench size, union nut	13 mm

External dimensions

Outside diameter	4 mm ... 8 mm

Housing

Diameter housing	15 mm

Material specifications

Flammability rating according to UL 94	V0
Seal material	NBR
Material of grip body	Zinc die-cast, nickel-plated
Contact material	CuSn
Contact surface material	Ni/Au
Contact carrier material	PP
Material for screw connection	Zinc die-cast, nickel-plated

Connection data

Conductor connection

Connection method	Piercecon® fast connection
Connection cross section	0.14 mm² ... 0.14 mm² (flexible)
Connection cross section AWG	26 (flexible)
Tightening torque	0.4 Nm (M12 knurl)
	2 Nm (Screw plug insert with sleeve housing as far it will go)
	1 Nm (Pressure nut with coupling sleeve)

Electrical properties

Rated surge voltage	0.8 kV
Insulation resistance	≥ 100 MΩ
Nominal voltage U_N	48 V AC
	60 V DC
Nominal current I_N	0.5 A (30 W)
Transmission speed	10 Gbps

Mechanical properties

Mechanical data

Insertion/withdrawal cycles	≥ 100

Connector

Connection 1

Head design	Plug
Head cable outlet	straight
Head thread type	M12
Head locking type	SPEEDCON
Coding	X

Interfaces

Signal type/category	Ethernet $CAT6_A$ (IEC 11801), 10 Gbps

Environmental and real-life conditions

Ambient conditions

Degree of protection	IP65
Ambient temperature (operation) (male connector/female connector)	-40 °C ... 85 °C (Plug / socket)

Standards and regulations

M12

Standard designation	M12 connector
Standards/specifications	IEC 61076-2-109

Drawings

Dimensional drawing

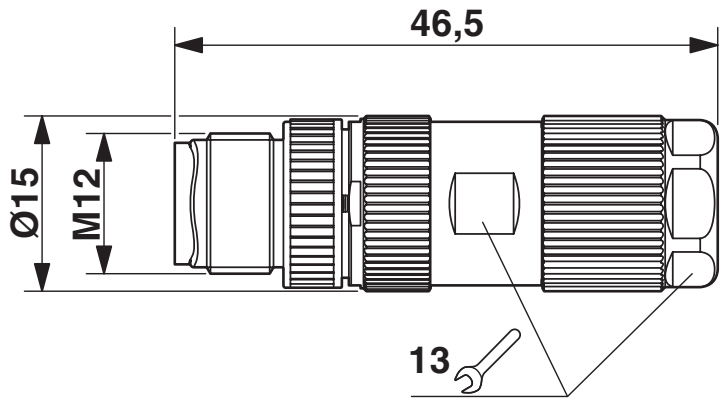

Dimens. drawing: M12 connectors

Schematic diagram

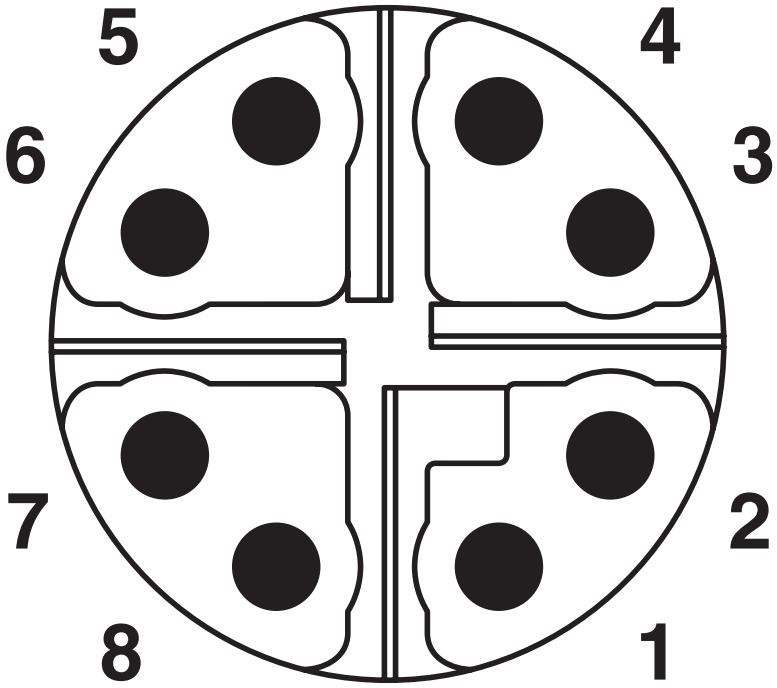

Pin assignment M12 plug, 8-pos., view plug side

Classifications

ECLASS

ECLASS-13.0	27440116
ECLASS-15.0	27440116

ETIM

ETIM 10.0	EC002635

UNSPSC

UNSPSC 21.0	39121400

Environmental product compliance

EU RoHS

Fulfills EU RoHS substance requirements	Yes, No exemptions

China RoHS

Environment friendly use period (EFUP)	EFUP-E
	No hazardous substances above the limits

EU REACH SVHC

REACH candidate substance (CAS No.)	No substance above 0.1 wt%

EF3.1 Climate Change

CO2e kg	2.302 kg CO2e

Phoenix Contact 2026 © - all rights reserved
https://www.phoenixcontact.com

Phoenix Contact USA
586 Fulling Mill Road
Middletown, PA 17057, United States
(+717) 944-1300
info@phoenixcon.com