SAC-3P- 5,0-PVC/B-1L-Z - Sensor/actuator cable

1415924

https://www.phoenixcontact.com/us/products/1415924

Please be informed that the data shown in this PDF document is generated from our online catalog. Please find the complete data in the user documentation. Our general terms of use for downloads are valid.



Sensor/actuator cable, 3-position, PVC, black RAL 9005, free cable end, on Valve connector B (10 mm), with 1 LED, Wiring: Z diode, cable length: 5 m

Your advantages

- Easy and safe: 100 % electrically tested plug-in components
- Convenient: increased machine availability thanks to quick and easy diagnostics

Commercial data

Item number	1415924
Packing unit	1 pc
Minimum order quantity	1 pc
Sales key	BF07
Product key	AF1DCA
GTIN	4055626054896
Weight per piece (including packing)	204.6 g
Weight per piece (excluding packing)	196 g
Customs tariff number	85444290
Country of origin	PL

Technical data

Product properties

Product type	Sensor/actuator cable with valve connector
Application	Standard
Number of positions	3
No. of cable outlets	1
Shielded	no

Insulation characteristics

Overvoltage category	III
Degree of pollution	3

Material specifications

Flammability rating according to UL 94	V0
Seal material	TPU (Seal molded)
Material housing valve plug	TPU
Contact material	CuSn
Valve plug contact insert material	PA 6.6
Contact surface material	Sn

Electrical properties

Insulation resistance	≥ 100 MΩ
Nominal voltage U_N	24 V AC
	24 V DC
Nominal current I_N	4 A

Valve connector characteristics

Fixing screws	M3 x 29
Pulse power	40 W (at 100 µs square-wave pulse)
Terminal voltage	70 V (at 2 mA constant current)
Reverse voltage	50 V

Signaling

Status display	1 LED
Status display present	yes

Connector

Connection 1

Type	free cable end

Connection 2

Type	Valve connector B (10 mm)
Number of positions	3
	CuSn (Contact)

Material	Sn (Contact surface)
	PA 6.6 (Contact carrier)
	TPU (Housing)
Protective circuit	Z diode

Cable/line

Cable length	5 m

PVC black [PVC]

Dimensional drawing	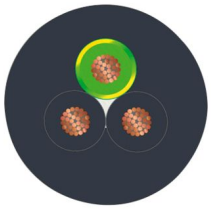
Cable weight	38.6 kg/km
UL AWM Style	2464
Number of positions	3
Shielded	no
Cable type	PVC black [PVC]
Conductor structure signal line	16x 0.20 mm
AWG signal line	20
Conductor cross-section	3x 0.5 mm²
Wire diameter incl. insulation	1.5 mm ±0.05 mm
External cable diameter	4.80 mm ±0.2 mm
Outer sheath, material	PVC
External sheath, color	black RAL 9005
Conductor material	Bare Cu litz wires
Material wire insulation	PVC
Single wire, color	black 1, black 2, green/yellow
Overall twist	3 wires, twisted
Max. conductor resistance	39 Ω/km (at 20 °C)
Insulation resistance	≥ 20 MΩ*km
Nominal voltage, cable	300 V
Test voltage	1200 V
Minimum bending radius, fixed installation	5 x D
Smallest bending radius, fixed installation	24 mm
Flame resistance	DIN VDE 0482
	DIN EN 50265-2-1
Resistance to oil	in accordance with DIN EN 60811-2-1
Ambient temperature (operation)	-40 °C ... 80 °C (cable, fixed installation)
	-5 °C ... 80 °C (Cable, flexible installation)

Environmental and real-life conditions

Ambient conditions

Degree of protection	IP65
	IP67
Ambient temperature (operation) (Valve connector)	-20 °C ... 85 °C (Valve connector)

Standards and regulations

Valve connector

Standard designation	Valve connector
Standards/specifications	EN 175301-803

Drawings

Dimensional drawing

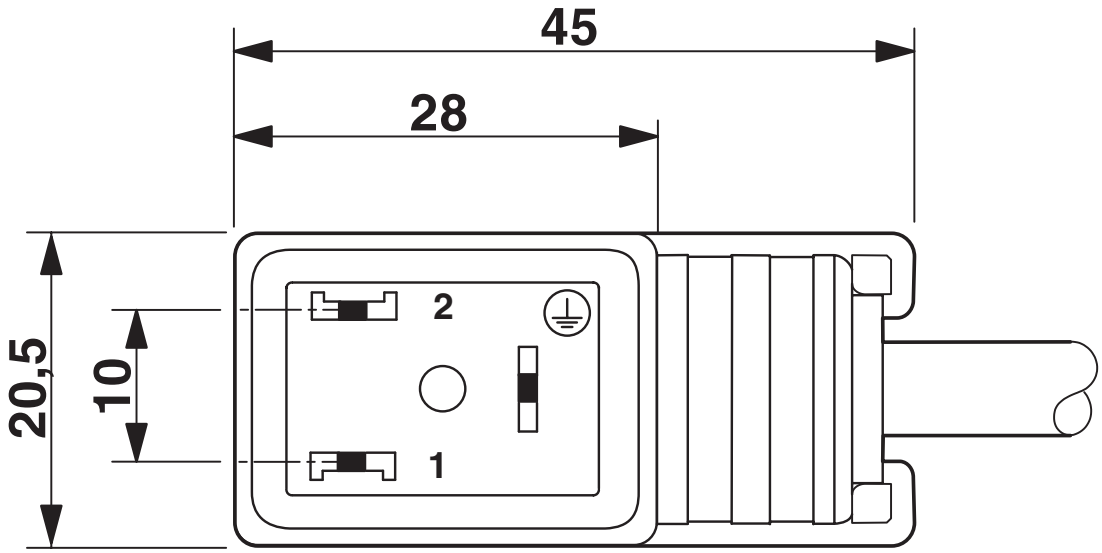

Valve connector, type B

Dimensional drawing

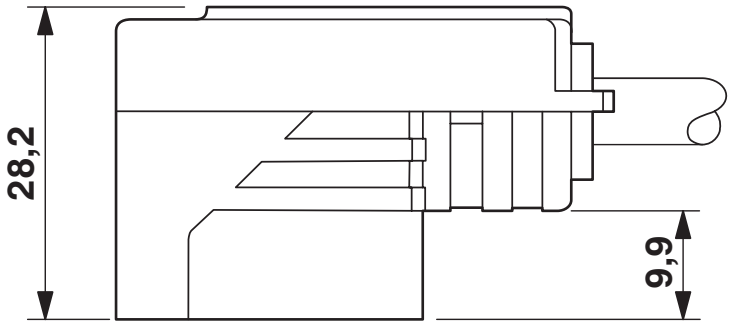

Valve connector, type B, side view

Schematic diagram

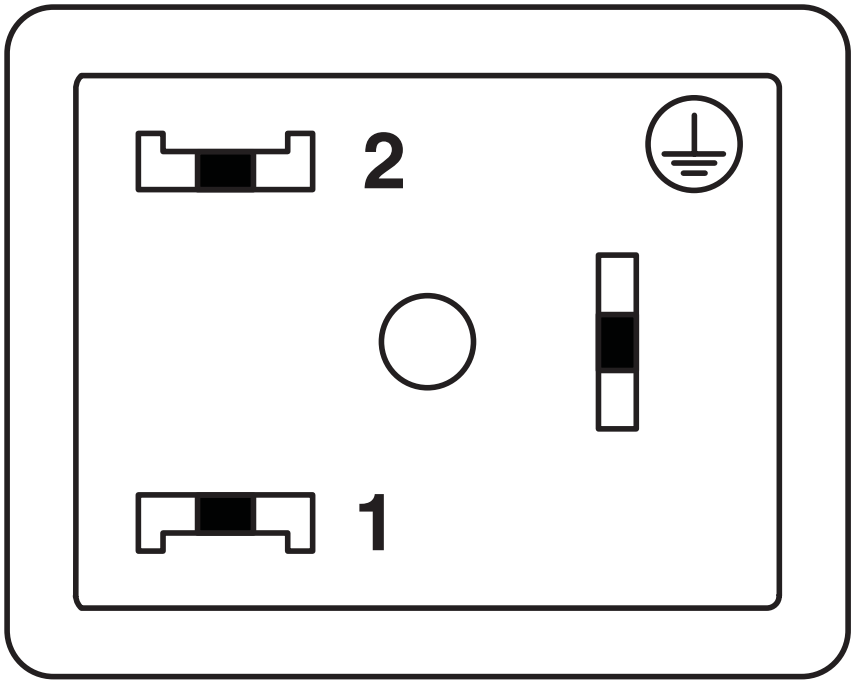

Valve connector pin assignment, type B

Circuit diagram

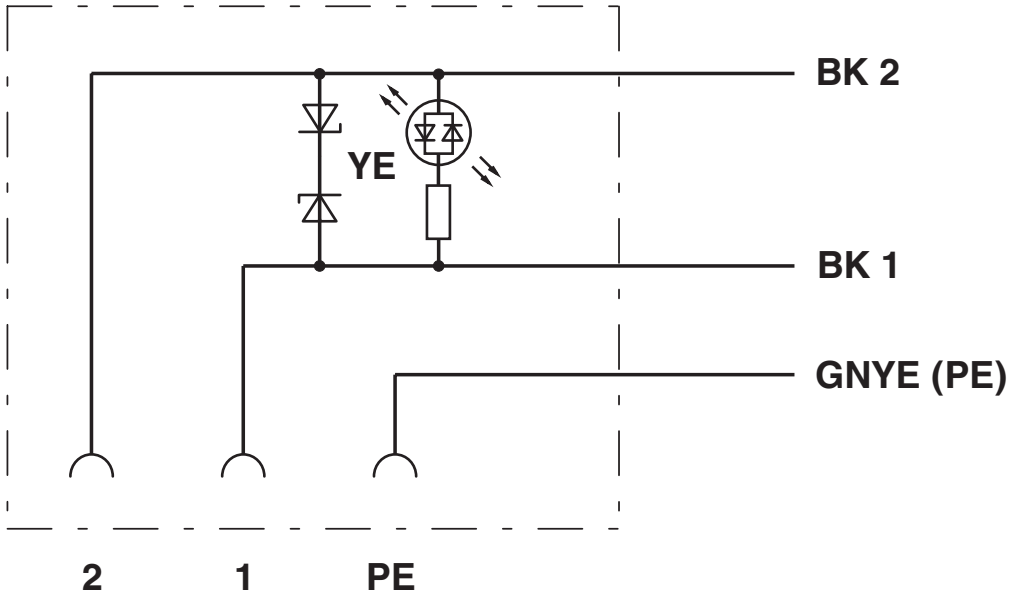

Contact assignment of the valve plug

Approvals

To download certificates, visit the product detail page: https://www.phoenixcontact.com/us/products/1415924

EAC-RoHS
Approval ID: RU D-DE.HB35.B.00387

CSAus
Approval ID: 13631

	Nominal voltage U_N	Nominal current I_N	Cross section AWG	Cross section mm^2
keine				
	24 V	6 A	-	-

Classifications

ECLASS

ECLASS-13.0	27060312
ECLASS-15.0	27060312

ETIM

ETIM 10.0	EC001855

UNSPSC

UNSPSC 21.0	31251500

Environmental product compliance

EU RoHS

Fulfills EU RoHS substance requirements	Yes
Exemption	7(c)-I

China RoHS

Environment friendly use period (EFUP)	EFUP-50
	An article-related China RoHS declaration table can be found in the download area for the respective article under "Manufacturer declaration". For all articles with EFUP-E, no China RoHS declaration table issued and required.

EU REACH SVHC

REACH candidate substance (CAS No.)	Diboron trioxide(CAS: 1303-86-2)
	Lead monoxide (lead oxide)(CAS: 1317-36-8)

EF3.1 Climate Change

CO2e kg	2.324 kg CO2e

Phoenix Contact 2026 © - all rights reserved
https://www.phoenixcontact.com

Phoenix Contact USA
586 Fulling Mill Road
Middletown, PA 17057, United States
(+717) 944-1300
info@phoenixcon.com